Mathematical Models of Flash Charging Method for Supercapacitors

Nobumasa Misaki,[1] *Masayasu* Inaguma,[2] *Kazuya* Akashi,[2] and *Tastuya* Yamamoto[2]

Recently, a lot of mobile equipment has installed "Electrical energy storage devices" that are available in various markets. It is preferable that all kinds of mobile equipment will be used in the condition of high efficiency.However, the idle time relating with moving to charging stations and recharging the devices is inevitable. To save time, supercapacitors, such as "Electrical Double Layer Capacitor" or "Lithium-Ion Capacitor" with huge capacitance, can be employed because of their excellent rapid charging abilities.

In order to charge them, a power supply that can provide a supercapacitor with enough electricity is required. Although supercapacitors have such great benefit, it is very difficult to find the power supply whose cost or weight is satisfactory. With this in mind, a simple rapid charging system while using a supercapacitor is strongly advised. Flash Charging Method is a solution that enables charging supercapacitors rapidly.

This paper presents Mathematical Models which can implement to calculate the charging time when Flash Charging Method is applied to charge supercapacitors, even though both a required "State of Charge（SOC）" and a required charging time are settled prior to the system design. Results of experiments to demonstrate the models are also presented.

1. Introduction

Recently the market of mobile equipment—Electric Vehicle, Cell phone, Drone, Robotic Vacuum Cleaner, and so on—is growing in the world. Most of the mobile equipment installs electrical storage devices which always require an electrical charging system. A lot of mobile equipment must be moved to charging stations, and also is forced to waste time charging electrical storage devices. Therefore, a new storage device or a new charging system is expected to improve the charging speed.

A supercapacitor is one of the electrical storage devices, which has distinctive advantages. As a method of charging a supercapacitor such as an electric double layer capacitor (hereinafter called EDLC) or a lithium ion capacitor (hereinafter called LIC), it is available to use a DC power supply which is connected to a commercial power system. Figure 1 shows a basic configuration when a supercapacitor is charged by a DC power supply. DC power supplies have the function to maintain the constant DC current or the constant DC voltage. When supercapacitors are charged with the DC power supply, the charging process consists of two stages. The first stage is under Constant DC Current Mode. At this stage, DC voltage increases with time and then approaches the maximum rated voltage. When the voltage value is just less than the maximum rated voltage, the function of the DC power supply is changed to the second stage. The second stage is under Constant DC Voltage Mode. At this stage, the charging current decreases with time and then will converse to zero ampere. Consequently, supercapacitors are prevented from the damage by an excess voltage. This method is called Constant Current - Constant Voltage Method (hereinafter called CC - CV). Figure 2 shows the charging profile in using the CC-CV and the relationship between "charging current or charging voltage" and "charging time".

The CC-CV is also adopted for charging the secondary batteries such as a lithium ion battery. Since a charging mechanism of secondary batteries is based on Faradaic reaction with a slow reaction rate,

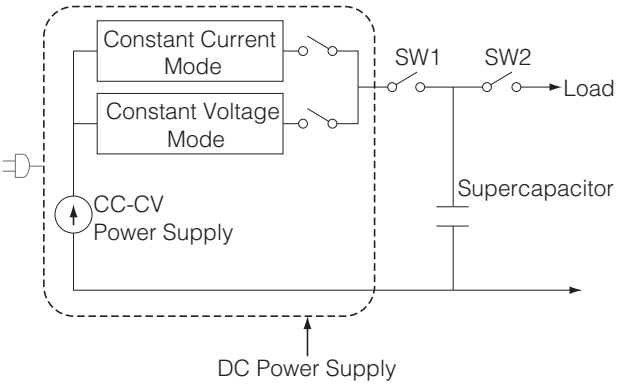

Fig. 1. Basic Configuration Diagram of CC-CV Method.

1 Technical Advisor
2 Advanced Technology Laboratory

Panel 1. Abbreviations, Acronyms, and Terms.

EDLC—Electric Double Layer Capacitor
LIC—Lithium Ion Capacitor
Li—Lithium
CC-CV—Constant Current - Constant Voltage
J_f—Faradaic current
J_{nf}—non - Faradaic current
SOC—State of Charge
OCV—Open Circuit Voltage
CCV—Closed Circuit Voltage

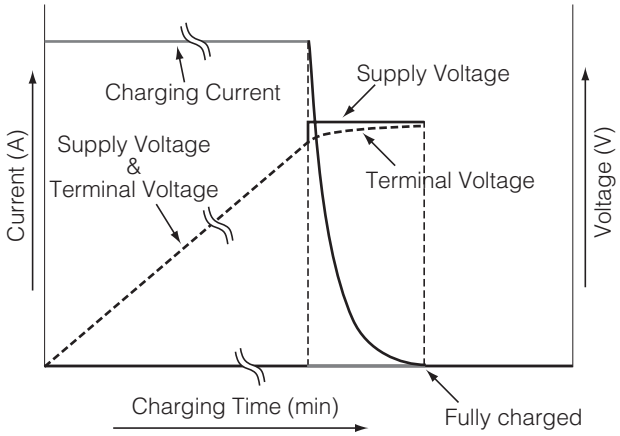

Fig. 2. Charging profile of CC-CV.

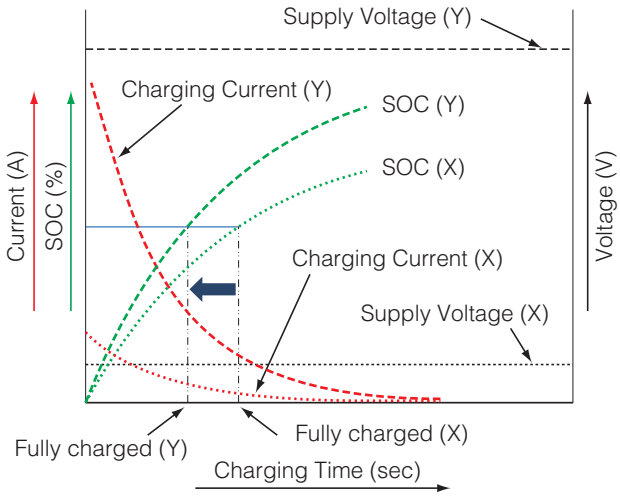

Fig. 3. Charging profile of Constant Voltage from Power Supply.

several tens of minutes or more will be required as charging time. If an exceeding Faradaic current is applied to rapidly charge lithium ion batteries, the excess current might cause some troubles—gas generation due to decomposition of electrolyte or short-circuiting due to depositions of lithium metal. Therefore, the CC-CV system is suitable for lithium ion batteries because of its slow reaction. On the other hand, a charging mechanism of supercapacitors is based on the simple movement of charge carriers, whose speed is much faster than that of Faradaic reaction. Therefore, it is possible in principle to charge supercapacitors more rapidly than lithium ion batteries. In order to put the rapid charging to practical use, it is necessary for supercapacitors to start being charged with not DC Constant Current Mode but DC Constant Voltage Mode. Figure 3 shows the charging profile when the charging is applied with DC Constant Voltage Mode from the beginning. In addition to the beginning mode, the charging time also depends on the applied voltage level which is limited within specified value. If two kinds of voltage levels (low and high) exist, the charging time at a high voltage is faster than that at a low voltage as shown in Fig. 3. In either case, an inrush current occurs at the beginning of charging because of the huge capacitance and low internal resistance of supercapacitors. The large inrush current causes the energy loss in the DC power supply and also decreases the charging efficiency. These disadvantages will seriously affect a design of charging system; we have to prepare some DC power supply which is huge-sized, expensive, and capable of high output-power to control the inrush current. Therefore, the desire to rapidly charge a supercapacitor has been abandoned and the CC-CV is available for a supercapacitor which is charged in the same manner as charging a secondary battery.

In using a CC-CV, we can predict the time at which supercapacitors can be approximated as fully charged. The time is based on the point where the supply voltage and the terminal voltage is the same value as shown in Fig. 2. It means the value of charging current is zero ampere. In case of a CC-CV, most of the charging time is occupied under DC Constant Current Mode, so that the coulombs—same as the amount of electricity (hereinafter called electric charge)—will be simulated by multiplying the charging time and the charging current.

When a supercapacitor is charged, the charging current generates some voltages across the internal resistance of supercapacitor-cell. The closed circuit voltage (hereinafter called CCV) contains this additional voltage until a charging current is interrupted. If the charging circuit is opened before the charging current is approximated to zero ampere, the additional voltages disappear immediately. Therefore, the open circuit voltage (hereinafter called

OCV) becomes lower than CCV by the additional voltages. When we apply the CC-CV to charging supercapacitors and then interrupt the charging at early time after the mode has been changed from the constant current to the constant voltage, we cannot obtain the value of disappeared voltage without measuring OCV. Therefore, we will have to find out the OCV which is corresponding to the expected SOC. The OCV and the charging time has to be determined by trial and error until the expected SOC is obtained.

In recent years, Flash Charging Method—transfer the electrical energy from a fully charged storage device to an uncharged storage device—has attracted attention [1]. Flash Charging Method is suitable for charging the uncharged storage device in short time because an already charged storage device can provide the large inrush current.

Fujikura Ltd. has developed a rapid charging system using Flash Charging Method between two supercapacitors. Figure 4 shows the diagram of supercapacitors application with Flash Charging Method. The process of Flash Charging Method in Fig. 4 is the following steps. The first step, SW1 turns on and SC1 (supercapacitor) is charged by the CC-CV power supply. The second step, SW1 turns off after SC1 is fully charged. The third step, SW2 turns on and SC2 (supercapacitor) is charged by SC1. The fourth step, SW2 turns off after SC2 is charged to the required SOC. This system is capable of charging SC2 in short time and is effective when the number of charging stations is large and the distance between them is short. However, it is not easy to estimate the shortest charging time at which a required SOC of SC2 can be achieved. In general, the amount of electric charge is expressed as A×h (A: Constant DC current, h: hours). In case of a CC-CV system, the amount of electric charge can be estimated by multiplying the charging time and the charging current as mentioned above. On the other hand, in the case of charging from a supercapacitor to a supercapacitor, it is difficult to estimate the amount of electric charge. There are two reasons for the difficulties. One is no use in measuring the charging time because the value of charging current is not constant but a function of time. The other is that there is no way to estimate an OCV of SC2 in charging because the CCV of SC2 is increasing exponentially with time.

If the maximum rated voltage of SC1 and SC2 are the same value, the maximum SOC of SC2 cannot reach 100%. Because the voltage of SC2 is always less than the initial voltage of SC1 which is the maximum voltage and corresponding to 100% SOC of SC1. It means that a final SOC of SC2 is indefinite, so that we need a step which can force the charge of SC2 to terminate at a specified time or some CCV level. If we stop charging before the current is approximated to zero ampere, OCV becomes lower than CCV. In order to implement the short charging duration with Flash Charging Method, it is expected for us to infer the voltage gap between CCV and OCV prior to the system design.

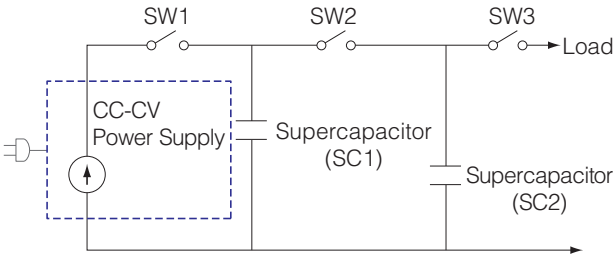

Fig. 4. Basic Configuration Diagram of Flash Charging Method.

We have developed a mathematical model of charging supercapacitors with Flash Charging Method. This model can analyze the transient state of charging current and then can build an equation to obtain the OCV of SC2 prior to designing a system. A system designer can also give the desired SOC to SC 2 prior to the system design and can get the information in advance whether the desired SOC can be realizable or not. Besides, the mathematical model can indicate the shortest charging time. This paper shows the mathematical model which can realize the rapid charging system with the supercapacitors. In order to demonstrate the mathematical model, the results of experiments are also presented.

2. Supercapacitor

First, Figure 5 shows the schematic diagram of an EDLC, and also indicates the state after fully charged. If the SOC is zero%—after being discharged—and then some DC voltage is applied between the current

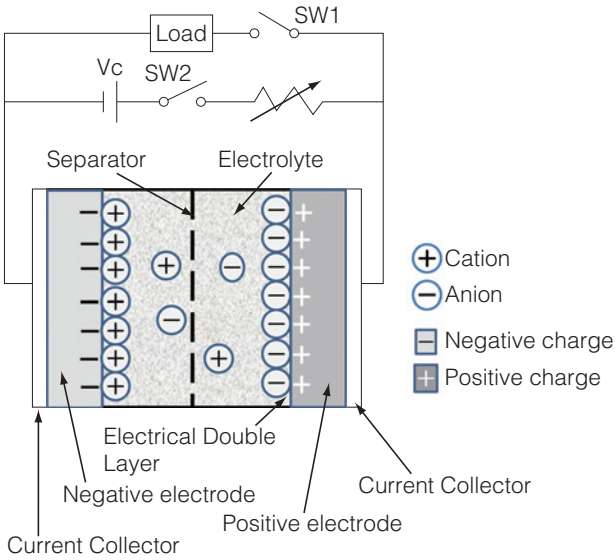

Fig. 5. EDLC Schematic Diagram (Fully Charged).

collectors of the EDLC, an electrical current "J" will flow to the positive electrode. The current includes Faradaic current "J_f" and non- Faradaic current "J_{nf}," so that the current can be expressed as "$J = J_f + J_{nf}$." [2] When the applied voltage is lower than "certain voltages," "J_f" becomes zero ampere. Accordingly, "J" is expressed as "$J = J_{nf}$." In this case, at the start when one of "certain voltages" is applied, the large instantaneous current "J_{nf}" flows to the positive electrode. After that, "J_{nf}" will decrease exponentially with time and then converge to zero ampere. In the voltage range where only "J_{nf}" can flow, a layer called "Electric Double Layer," of which thickness is a molecular level, is formed between the electrodes and the electrolyte; this configuration is used as a capacitor. As the material of positive and negative electrode is activated carbon, we can obtain a large surface area on the electrode. According to the thin and large layer, we can create a capacitor-cell with several thousands of Farads. A charging procedure in Fig. 5 is as follows: the SW1 and the SW2 are open, the SW2 turns on, "certain voltages" are applied to the EDLC, "J_{nf}" starts flowing, and then "J_{nf}" converges to zero ampere.

As above mentioned, Figure 5 indicates the state in which the SW 2 is open after "J_{nf}" has converged to zero ampere. If the applied voltage is higher than the largest of "certain voltages," "J" will change from "$J = J_{nf}$" to "$J = J_f + J_{nf}$." The reason why "J" includes "J_f," is that the voltage between positive electrode and negative electrode reaches the value of decomposition level. As a result, "J" does not converge to zero ampere and the formula of "$Q = C \times V$"(Q: coulomb or electric charge, C: capacitance, V: applied voltage) is not satisfied. When an organic electrolyte is used for making EDLCs, the maximum of "certain voltages" is about 3 V. The maximum operating voltage for EDLCs can be determined after the long-term reliability tests with several conditions around 3 V. While charging EDLCs, we need to control the voltage between the current collectors in order not to exceed the maximum operating voltage. This kind of maximum operating voltage is hereinafter referred to as "*maximum end-of-charge voltage*."

Next, Figure 6 shows the schematic diagram of a LIC. In case of LICs, the structure of the positive electrode is the same as an EDLC. Therefore, an electrical double layer is generated on the positive electrode. The structure of the negative electrode is different from that of an EDLC. Graphite is the main material of negative electrode. In the process of manufacturing negative electrode, graphite is intercalated with lithium ions. After lithium pre-doping into graphite, the negative electrode is charged and gains the electric charge as an initial state, so that there is approximately 3 V potential difference between the negative electrode and the electrolyte. Due to this

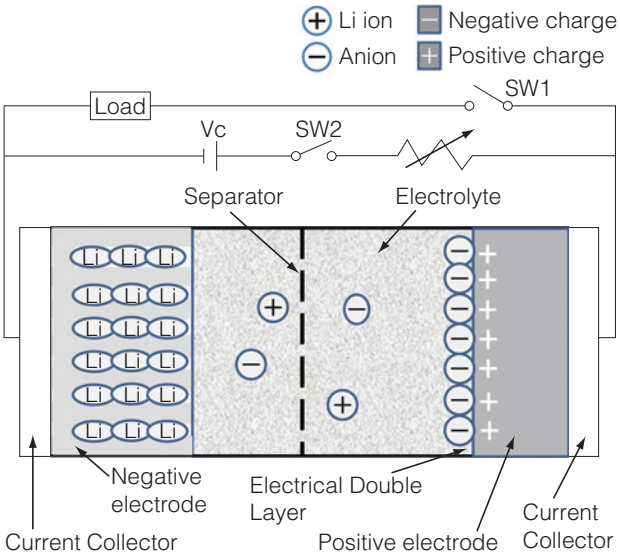

Fig. 6. LIC Schematic Diagram (Fully Charged).

potential difference, the *maximum end-of-charge voltage* of LICs is 3.8 V which is higher than EDLCs.

Figure 6 shows that the SW2 is opened after the LIC is fully charged. If we turn on the SW1 after the SW2 has been opened, the electric charge will start being discharged and an electrical current will flow from the positive electrode.

At the same time, the fully charged lithium ions in negative electrode—other than lithium pre-doping into graphite—are released from the negative electrode. The phenomenon that occurred at the negative electrode means the discharge associated with the Faradaic reaction. In order to prevent from an over-discharge, we have to always keep the lowest limit of CCV. The CCV value of the lowest limit is 2.2 V in case of LICs. Therefore, when the LIC is discharged, the SW1 must not be closed at the voltage lower than the lowest limit of CCV. This kind of the lowest voltage is hereinafter referred to as "*minimum end-of-discharge voltage*." In order to guarantee the rated number of charge cycles, we have to also keep the *minimum end-of-discharge voltage* of CCV.

If we use an EDLC, it is not necessary to manage the *minimum end-of-discharge voltage* because the *minimum end-of-discharge voltage* is simply required to be greater than zero V. When system designers plan to charge and or discharge EDLCs or LICs, system designers cannot avoid the restrictions of the *maximum end-of-charge voltage* and the *minimum end-of-discharge voltage*.

3. Analysis of Flash Charging Circuit and Mathematical Model of Charging time

3.1 Equivalent internal circuit of supercapacitor

In order to establish a mathematical model of Flash Charging Method, the mathematical model needs an

equivalent internal circuit of a supercapacitor-cell. Several equivalent internal circuits have been proposed [3]. Since the objective of this development is aimed at the design guidelines, a simple equivalent internal circuit is preferable to building the mathematical model. Figure 7 shows the applied equivalent internal circuit.

3.2 Assumption of charging circuit

The amount of electric charge "Q = C × V" is proportional to the applied voltage. In case of EDLCs, the relation between Q and V has the same linearity as general capacitors. On the other hand, in the case of LICs, the discharging mechanism is slightly different from EDLCs. In general, the ***maximum end-of-charge voltage*** per LIC-cell is 3.8 V and the ***minimum end-of-discharge voltage*** is 2.2 V, which are across the two current collectors in Fig. 6. After we starts discharging the LIC, the voltage between the current collectors is decreasing. When the decreasing voltage reaches around 3 V, the polarity of the ions which are adsorbed to the positive electrode will reverse from anion to Li^+ ion. Strictly speaking, the relation between Q and V is not linear at that point. However, it can be approximately equal to "Q = C × V."

The ***maximum end-of-charge voltage*** of the supercapacitor-cell is denoted by Emax, and the ***minimum end-of-discharge voltage*** is denoted by Emin. If Vx denotes any OCV between Emin and Emax, the charging rate SOCx (%) can be expressed by the following equation because of the linear relationship as "Q=C × V."

$$SOCx = \frac{Vx - Emin}{Emax \times Emin} \times 100. \quad \cdots\cdots\cdots\cdots(1)$$

By substituting Emax for Vx in Eq. (1), SOCx becomes 100%. By substituting Emin for Vx in Eq. (1), SOCx becomes zero%.

If each of SC1 and SC2 in Fig. 4 consists of a supercapacitor-cell, the equivalent internal circuit in Fig. 7 can be applied to SC1 and SC2. Figure 8 shows the diagram of an equivalent circuit that represents the core of Flash Charging Method in Fig. 4. In Fig. 8, "C1 and R1" denote "the capacitance and the internal resistance" in SC1 respectively. C2 and R2 in SC2 are defined as well as SC1.

In order to analyze the circuit with Flash Charging Method as shown in Fig. 4, we define the initial conditions as follows: the SOC of SC1 is 100%, SOC of SC2 is zero%, and SW1, SW2 and SW3 are opened. We also define that each Emax and each Emin between SC1 and SC2 are the same specifications in order to enable a simple voltage monitoring system to be built, the cost of electrical control apparatuses to be saved, and mathematical models to be simplified.

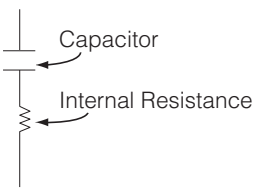

Fig. 7. Equivalent Internal Circuit Diagram of a supercapacitor-cell.

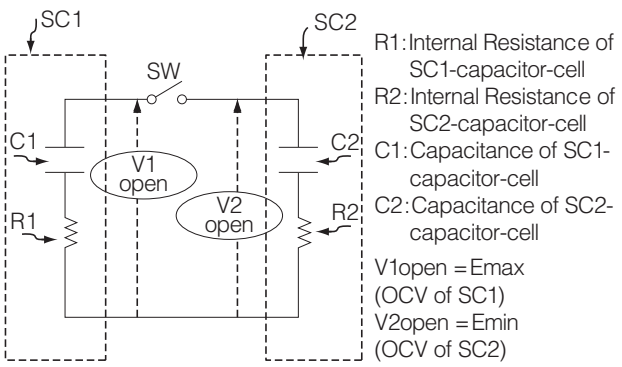

Fig. 8. Equivalent Circuit Diagram of Flash Charging Method.

3.3 "Current versus Time" Characteristic for Flash Charging Supercapacitors

When charging supercapacitors with Flash Charging Method, we can acknowledge the completion of charging by measuring the value of charging current. When the current reaches zero ampere, the charging is completed. In this case, the OCV is almost equal to the CCV, therefore, we can calculate the SOC from Eq. (1). A series of above procedures is based on the premise that there is not any restriction of charging time.

In order for us to theoretically obtain the SOC of SC2, it is expected to establish a mathematical equation which can represent an OCV as a function of time. There are several steps to obtain the equation.

The first step is to build an equation which can represent a characteristic of "current versus time." Figure 9 shows vectors of an electrical current and voltage in a state where the SW is closed. We can obtain the following equation (2) from Fig. 9. It assumes that there is no wiring resistance in Fig. 9.

$$-\frac{1}{C1} \times \int i(t)dt - R1 \times i(t) = \frac{1}{C2} \times \int i(t)dt + R2 \times i(t). \quad \cdots\cdots\cdots\cdots(2)$$

To solve Eq. (2), Laplace transform will be taken. The initial value of the indefinite integral in Eq. (2) is the product of OCV and capacitance. In case of left side of Eq. (2), the initial value of the indefinite integral is "multiple C1 by Emax." In case of right side of Eq. (2), it is "multiple C2 by Emin." On the left side of the SW

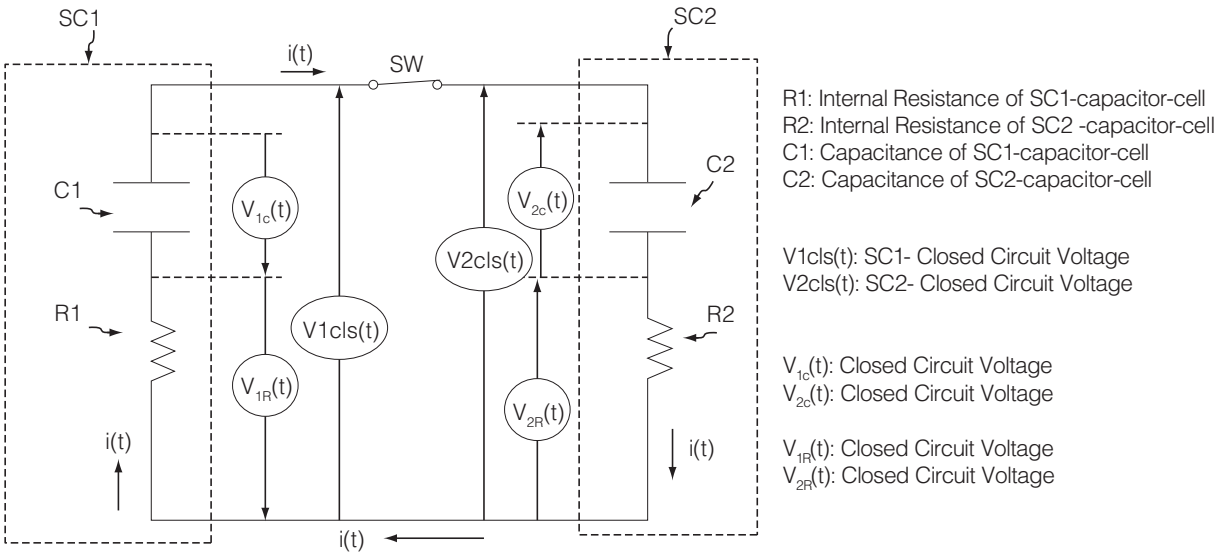

Fig. 9. Current Vector and Voltage Vector in Charging of Flash Charging Methodl.

in Fig. 9, the direction of vector regarding to OCV is in the opposite direction to that of CCV. Therefore, the initial value of the electric charge is "− C1 × Emax". Since the direction of the OCV vector of SC2 in Fig. 9 is the same direction as CCV, the initial value of the electric charge is "C2 × Emin." Consequently, the Laplace transform can convert Eq. (2) to the following:

$$-\frac{I(s)}{C1\times S}-\frac{-C1\times Emax}{C1\times S}-R1\times I(s)=\frac{I(s)}{C2\times S}+\frac{C2\times Emin}{C2\times S}+R2\times I(S).$$

Therefore,

$$I(S)=\frac{Emax-Emin}{R1+R2}\times\frac{1}{S+\frac{C1+C2}{C1\times C2\times(R1+R2)}}. \quad \cdots(3)$$

From the inverse Laplace transform of Eq. (3),

$$i(\mathrm{t})=\frac{Emax-Emin}{R1+R2}\times e^{\frac{-(C1+C2)\times t}{C1\times C2\times(R1+R2)}}. \quad \cdots\cdots(4)$$

Equation (4) shows the theoretical characteristic of "current versus time" in charging supercapacitors with Flash Charging Method. Besides, Eq. (4) becomes the basic equation to create an equation which can represent the theoretical characteristic of "OCV versus time" in SC2.

3.4 Implementation of Flash Charging circuits with supercapacitors

When we design an actual charging circuit with Flash Charging Method, the following initial conditions are essential; condition (1) is "C1 > C2" where C1 is the equivalent capacitance of SC1, and C2 is the equivalent capacitance of SC2; condition (2) is "SOC 1 > SOC 2" where SOC1 is SOC of SC1 and SOC2 is SOC of SC2.

The initial OCV of SC1 is Emax (100% SOC) and the initial OCV of SC2 is Emin (zero% SOC), so that the condition (2) is satisfied.

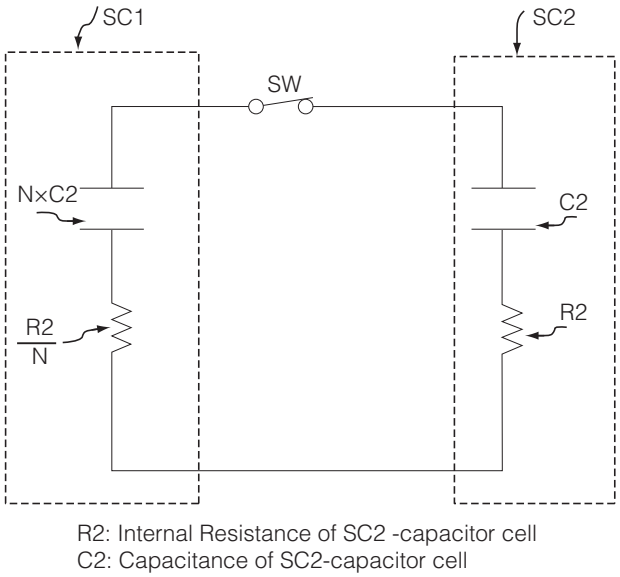

Fig. 10. Equivalent Circuit Diagram in case of SC1 with N cells connected in parallel.

In order to implement the condition (1), we define that each capacitor-cell of SC1 and SC2 has the same specifications. SC2 is composed of one cell, and SC1 is composed of N cells which are wired in parallel. The number of layers is only one in each SC1 and SC2. Therefore, the capacitance of C1 is N times larger than C2. Figure 10 shows the diagram of equivalent circuit—the capacitor bank of N cells as one equivalent cell. As shown in Fig. 10, the capacitance of SC1 is "N × C2" and the internal resistance of SC1 is "R2 / N".

By substituting R1 for "R2 / N" in Eq. (4) and by substituting C1 for "N × C2" in Eq. (4), Equation (4) is

rearranged as follows:

$$i(t) = \frac{N \times (Emax - Emin)}{(N+1) \times R2} \times e^{\frac{-t}{C2 \times R2}}. \cdots\cdots(5)$$

3.5 Mathematical Model of Flash Charging Supercapacitors

In charging supercapacitors with Flash Charging Method as shown in Fig. 10, we need to open the SW forcibly in a certain time. Figure 11 shows the terminal voltage of both SC1 and SC2. The voltage of SC2 will drop suddenly if the charging current is cut off earlier than that reaches zero ampere. Therefore, the OCV of SC2 is ΔV_2 as low as the CCV of SC2, as shown in Fig. 11. When the CCV of SC2 reaches the voltage value that is corresponding to the desired SOC (hereinafter called SOCd), the charging circuit can be opened. However, the SOC—after the circuit has been opened—is less than SOCd because the OCV is ΔV_2 as low as the CCV of SC2 which is corresponding to SOCd. It is an important issue how to find a mathematical formula to compensate for the voltage drop of ΔV_2.

The second step is to find the equation that can indicate the characteristic of "SOCd versus charging time," and to find the extended time which can correct ΔV_2. The ΔV_2 is equal to the voltage across the internal resistance R2 in Fig. 10, and its value equals $R2 \times i$ (t). When the charging current disappears in the open circuit, $R2 \times i$ (t) becomes zero and then the voltage drop ΔV_2 will appear. On the other hand, if the charging current continues flowing, the voltage value of SC2—CCV—increases with time. In order to compensate for ΔV_2, we need to extend the time when turning off the SW in Fig. 10, until the additional time is corresponding to ΔV_2. Therefore, we need another equation except Eq (2), which can represent the relation between SOCd and charging time. We ultimately focused on Eq. (1) which is based on the open circuit. If Vx is a function of charging time, Vx is expressed as V (t) which is OCV. SOCx in Eq. (1) is also required to be expressed as a function of charging time.

To build the equation V (t), Equation (1) is rearranged; let SOCx be SOCx = m (t) × 100 ($0 \leq m \leq 1$) and let Vx be V (t). Therefore, equation (1) is rearranged as follows:

$$m(t) = (V(t) - Emin) \div (Emax - Emin).$$

Since the objective of this development is to establish the guideline of designing a Flash Charging System, SOCd is an important parameter. To create the equation of relationship between OCV of SC2 and charging time, a valuable and a constant is replaced; let SOCd be M × 100 ($0 < M < 1$), and let t be $T1$ which is the time when V ($T1$) reaches the voltage

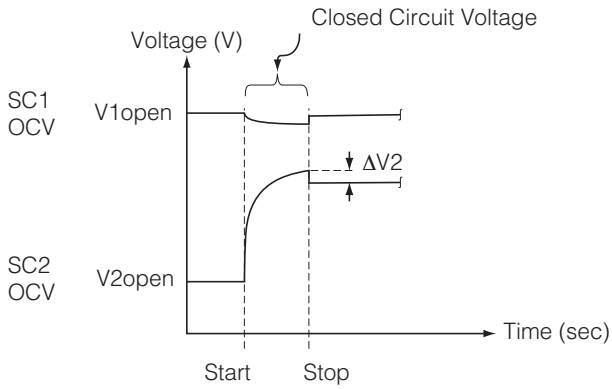

Fig. 11. Terminal Voltage in Charging & Discharging Profile.

corresponding to M. Therefore, V ($T1$) is represented as,

$$V(T1) = M \times (Emax - Emin) + Emin. \cdots\cdots(6)$$

The theoretical CCV of SC 2, at $T1$ seconds, is obtained by adding Emin to the right side of Eq. (2), so that the right side of Eq. (2) is rearranged as follows:

$$V(T1) = Emin + \frac{1}{C2} \times \frac{N \times (Emax - Emin)}{(N+1) \times R2} \times \int_O^{T1} e^{\frac{-t}{C2 \times R2}} dt + R2 \times \frac{N \times (Emax - Emin)}{(N+1) \times R2} \times e^{\frac{-T1}{C2 \times R2}},$$

$$= Emin - \frac{N \times (Emax - Emin)}{N+1} \times \left(e^{\frac{-T1}{C2 \times R2}} - 1 \right) + \frac{N \times (Emax - Emin)}{N+1} \times e^{\frac{-T1}{C2 \times R2}},$$

therefore,

$$V(T1) = Emin + \frac{N \times (Emax - Emin)}{N+1}. \cdots(7\text{-}1)$$

In order to correct ΔV_2, it is necessary to rearrange Eq. (7-1);

$$V(T1) = Emin + \frac{N \times (Emax - Emin)}{N+1} - R2 \times i(t). \cdots(7\text{-}2)$$

The rearrangement means that V($T1$) in Eq. (7-1) is changed from CCV to OCV which is V($T1$) in Eq. (7-2), by taking away $R2 \times i$ ($T1$) from Eq. (7-1). Accordingly, Eq. (6) is equal to Eq. (7-2);

$$M \times (Emax - Emin) + Emin = Emin + \frac{N \times (Emax - Emin)}{N+1} - R2 \times \frac{N \times (Emax - Emin)}{(N+1) \times R2} \times e^{\frac{-T1}{C2 \times R2}},$$

therefore,

$$M + \frac{N}{N+1} \times e^{\frac{-T1}{C2 \times R2}} = \frac{N}{N+1}. \cdots\cdots\cdots\cdots(8)$$

We take the natural logarithms both sides of Eq. (8);

$$T1 = -C2 \times R2 \times \log_e \left(1 - \frac{N+1}{N} \times M\right). \cdots\cdots(9)$$

Since anti-logarithm in Eq. (9) should be greater than zero,

$$N > \frac{M}{1-M}. \cdots\cdots\cdots\cdots\cdots\cdots (10)$$

When the SOCd—corresponding to the OCV—is required, the minimum charging time (T_1) is given by Eq. (9).

Equation (9) shows that the minimum charging time depends on 3 variables. Those are M, N and the time constant which is the product of C2 and R2 of a capacitor-cell. Regarding variables of M and N, these can be determined in advance by system designers. The variable of the time constant $C2 \times R2$ is an actual key factor to determine the minimum charging time.

We will summarize this paragraph—regarding to the design process of charging supercapacitors with Flash Charging Method. When the number of supercapacitor-cells in SC1 is N times greater than that of SC2 and the initial condition is needed that SOC of SC1 is 100% and SOC of SC2 is 0%, the summary is as follows:

(1) determine the desired charging rate M of SC 2 in advance,
(2) determine the parallel number N of SC 1 which has to satisfy the condition N > M / (1-M),
(3) calculate the time constant $C2 \times R2$ in the cell of SC2,
(4) calculate the shortest time T1 (sec) from Eq. (9).

We can conclude that Eq. (9) and Inequality (10) can achieve the Flash Charging Method that is applied to supercapacitors.

3.6 Introducing the maximum allowable charging time

To establish the design guideline relating to Flash Charging Method, it is important to complete the desired charging rate (M) within a desired charging time (Tx). This *T*x is hereinafter referred to as "the maximum allowable charging time." If a system designer builds some charging system and wishes to complete a SOCd within *T*x, the design guideline has to provide the information whether *T*x is feasible or not. We derive the following inequality from Equation (9) and Inequality (10);

$$Tx \leq -C2 \times R2 \times \log_e \left(1 - \frac{N+1}{N} \times M\right),$$

therefore,

$$C2 \times R2 \leq -Tx / \log_e \left(1 - \frac{N+1}{N} \times M\right). \cdots (11)$$

Once *T*x is decided, Inequality (11) is applied to examine the feasibility of *T*x. In order to complete the charging within *T*x, the time constant $C2 \times R2$ of the SC2 capacitor-cell should be less than or equal to the right side of Inequality (11). If Inequality (11) is not satisfied, it means that *T*x is smaller than T1 which is obtained by Eq. (9). In order to change from the unsatisfied system to a practical system, design conditions will be changed as follows: N is increased and/or M is reduced and/or *T*x is extended and/or the value of $C2 \times R2$ is reduced.

The above description assumes SC2 is a capacitor-cell. Regarding capacitor banks, Figure12 shows the capacitor bank of both SC1 and SC2. The equivalent-cell of SC 2 has the capacitance (Cz) and internal resistance (Rz): Cz = P / L × C 2 and Rz = L / P × R 2. The time constant $Cz \times Rz$ becomes "$Cz \times Rz$ = P / L × C 2 × L / P × R 2 = $C\ 2 \times R\ 2$." Therefore, the time constant $C\ z \times Rz$ is substituted by the time constant $C2 \times R2$ of the capacitor-cell. It means Eq (9) and Inequality (10) and (11) can be applied directly to the capacitor banks. The ***maximum end-of-charge voltage*** of Cy and Cz becomes "L × Emax" and the ***minimum end-of-discharge voltage*** becomes "L × Emin." Equation (9) is not affected by "L × Emax" and "L × Emin" because these variables are eliminated as well as Emax and Emin in the process of making Eq. (9).

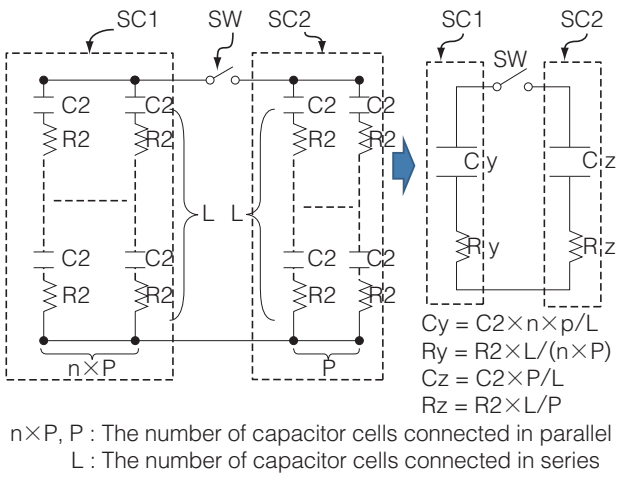

Fig. 12. Single Equivalent-cell corresponding with Capacitor Banks.

4. Experimental Results and Discussion

We carried out two kinds of experiments to demonstrate the minimum charging time and the desired "maximum allowable charging time" with Flash Charging Method. The purpose of the first experiment is to prove that the result will be successful as well as what the mathematical model predicts. The other one is to prove that the result will be unsuccessful as well as what the mathematical model predicts.

4.1 Rated Capacitance 80 Farads of SC2

We selected LICs for both SC1 and SC2. Each rated capacitance of a SC2-cell and a SC1-cell was same as

80 F. The number of capacitor-cells in SC2 was 1 cell, and SC1 had 10 cells which were connected in parallel. After SC1 was fully charged, we started charging SC2, whose initial SOC was 0%, with the SC1. The objective of this experiment was to validate M and *T*x. Table 1 shows the experimental conditions. Table 2 shows the capacitance and the internal resistance of each cell used in SC1.

When the desired charging rate (M) was 0.9, the condition of N was $N > 0.9/(10-9) = 9$ from Inequality (10). Therefore, N = 10 satisfied the condition. Moreover, *T*x was required to satisfy the Inequality (11). The right side of Inequality (11) is 2.17 and the time constant of experimental sample is 0.95 as shown in Table 1. Therefore, the time constant of the cell—experimental sample for SC2—satisfied Inequality (11) which was one of the Mathematical Models.

From above pre-analysis, the SOC of SC2 was expected to reach 90% within 10 seconds. Figure 13 shows the result of experiment with the characteristic of "voltage and charging current" versus "actual charging time." The horizontal axis shows the charging time. The vertical axis shows the charging current and the CCV of both SC1 and SC2, also OCV of SC2. The OCV of SC2 is calculated as follows: the first step is to read the value of measured current every 0.1 seconds from the graph in Fig. 13, and the second step is to calculate ΔV_2 which is the product of the current and internal resistance of SC 2 (11.7 mΩ).

The OCV of SC2 is obtained by subtracting ΔV_2 from CCV of SC2. Figure 14 shows "charging time" versus "SOC" which is obtained by the OCV of SC2. From the graph in Fig. 14, it takes 5.2 seconds for the SOC to reach 90%. Accordingly, *T*x—10 seconds—was satisfied.

Regarding the shortest charging time, when SOCd is 90%, Table 1 shows the theoretical shortest time is

Table 1. Experimental Condition.

	Item	Rate/Calculation	Experimental sample
A	Capacitance of SC2 (F)	80	81.4
B	Internal Resistance of SC2 (mΩ)	12	11.7
C	Time Constant (A × B) (ΩF or Sec)	0.96	0.95
D	the maximum end-of-charge voltage (V)	3.8	same as the left
E	the minimum end-of-discharge voltage (V)	2.2	same as the left
F	Configuration of SC2	One Capacitor-cell	same as the left
G	Configuration of SC1	10 Capacitor-cells in parallel	same as the left
H	Maximum Time Constant of Inequality (11) (ΩF or Sec)	2.17 (N = 10, M = 0.9, Tx = 10)	–
I	Minimum Charging Time (T_1) of Equation (9) (sec)	4.4	4.4
J	Ambient temperature	Room Temperature	same as the left

Table 2. Cells Data of SC1.

Capacitor Cell NO.	1	2	3	4	5	6	7	8	9	10	Average
Capacitance (F)	81.8	81.2	81.3	81.2	81.5	81.7	81.5	81.7	81.7	81.3	81.5
Internal Resistance (mΩ)	11.8	11.6	11.6	11.4	11.1	11.9	11.9	12.1	11.8	11.8	11.7

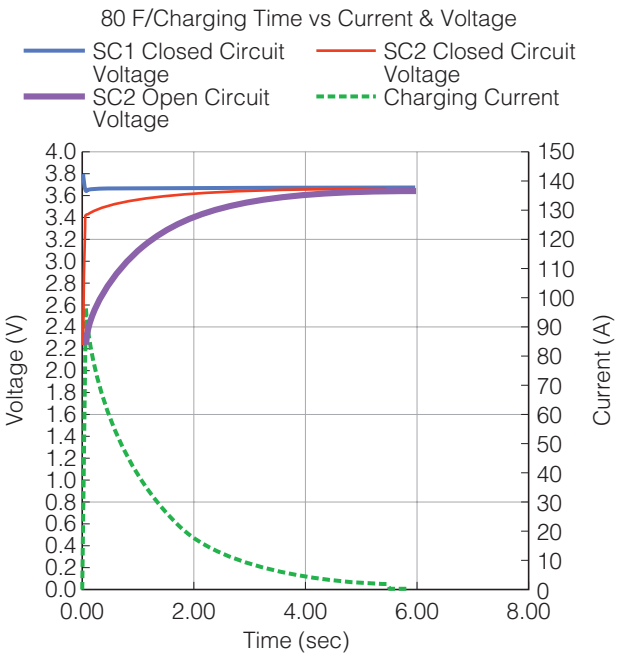

Fig. 13. SC2—80 F, SC1—80 F × 10 Experimental Result.

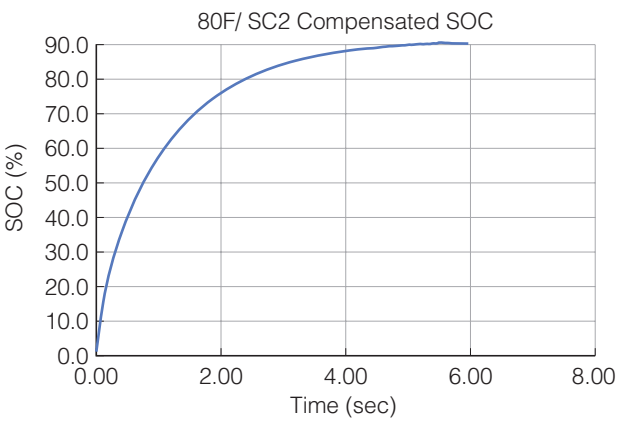

Fig. 14. Compensated SOC from Closed Circuit Voltage of SC2/80F.

4.4 seconds and also the expected time of experimental sample is 4.4 seconds. The experimental result was 5.2 seconds which was delayed 0.8 seconds as late as the calculated value. As factors of this delay, it seems to be considered as follows: the existence of the resistance or inductance of the wiring system, the difference between the equivalent internal circuit and the actual circuit in capacitor-cell as shown in Fig. 7, the capacitance variation of SC1-cells, and a deviation of the linearity as "Q = C × V" in case of LICs. If the wiring resistance is zero and we substitute R2 = 11.7 mΩ into the coefficient of Eq. (5), we will obtain 124.3 A as the peak value of inrush current. On the other hand, the actual peak value of the inrush current in the experimental result was 98 A from Fig. 13. The calculated value of peak inrush current is 1.27 times as large as that of experimental result. Since the capacitance variation of SC1-cells is small as shown in Table 2 and the wiring inductance is less than nH, it seems to be assumed that the delay factor is mainly in wiring resistance.

Figure 15 shows the equivalent circuit which includes the wiring resistance Rw1 and Rw2. When we try to find an equation that will represent the relationship between "charging current" and "charging time" with the wiring resistance, the same procedure as well as that of setting up Eq. (5) is adopted. Consequently,

$$i(\mathrm{t}) = \frac{N \times (Emax - Emin)}{(N+1) \times R2 + N \times Rw} \times e^{\frac{-(N+1)t}{C2 \times ((N+1) \times R2 + N \times Rw)}}, \quad \cdots\cdots (12)$$

where Rw = Rw 1 + Rw 2.
By substituting t for zero in Eq. (12),

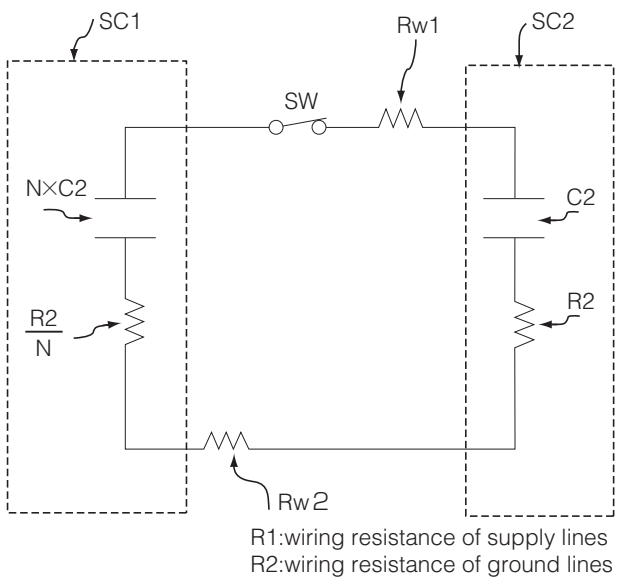

Fig. 15. Equivalent Charging Circuit Diagram in case of including wiring resistance.

$$98 = (Emax - Emin) \div (R2 \div N + R2 + Rw)$$

From Table 1, R2=11.7 mΩ and N = 10.
Therefore Rw = 3.4 mΩ.
In our experimental planning, we tried to reduce the wiring resistance less than 10 mΩ. Therefore, time delay of 0.8 seconds seems to be due to the wiring resistance of 3.4 mΩ.

From Fig. 14, the graph indicates 75% SOC at 2 seconds. The electric charge with 75% SOC (C × V × 0.75) is equal to 81.4 × (3.8 − 2.2) × 0.75 = 97.7 As (As: Ampere Second). When a CC-CV is applied to charging 97.7As in 2 seconds, we have to prepare the CC-CV power supply which can provide a supercapacitor with approximately DC 49 A (a half of 97.7 A). When the Flash Charging Method is applied to supercapacitors, the required output of CC-CV power supply depends on the expected charging time of SC1. If the SC1 can take 10 seconds—downtime of SW2 in Fig. 4—to be fully charged, the CC-CV power supply requires 97.7 ÷ 10 = 9.7 A, that is, we can reduce the size of CC-CV power supply to 1/5. Besides, the system can be expected to stabilize the electrical grid network.

4.2 Rated Capacitance 40 Farads of SC2

In the experiment of 80 F in the preceding paragraph, we verified that the mathematical model was feasible because of the observed data. The purpose of next experiment is to verify the mathematical model which indicates impossibility of charging supercapacitors with SOCd and *T*x.

We selected LICs for both SC1 and SC2 in this experiment. Each rated capacitance of a SC2-cell and a SC1-cell was same as 40 F. As well as the experiment of 80 F, the number of capacitor-cells in SC2 was1 cell, and SC1 had 10 cells which were connected in parallel. After SC1 was fully charged, we started charging SC2 whose initial SOC was 0%, with the SC1. Table 3 shows experimental conditions. Table 4 shows the capacitance and the internal resistance of each cell used in SC1.

When the desired charging rate (M) was 0.9, the condition of N was N > 0.9 / (1 − 0.9) = 9 from Inequality (10). Therefore, N = 10 satisfied the condition. Besides, *T*x was required to satisfy the condition of Inequality (11). As shown in Table 3, the right side of Inequality (11) is 2.17. Table 3 also shows the time constant, which is calculated based on the specification of experimental sample, is 6.0. Therefore, Inequality (11) was not satisfied. It meant that Mathematical Model indicated the impossibility of charging supercapacitors with SOCd and *T*x. In this experiment, it was not expected that SC2 reached 90% SOC within 10 seconds.

Figure 16 shows the result of experiment with the characteristic of "actual charging time" versus "SOC of SC2". The curve of SOC is calculated from the

Table 3. Experimental Condition.

	Item	Rate/Calculation	Experimental sample
A	Capacitance of SC2 (F)	40	39
B	Internal Resistance of SC2 (mΩ)	150	173
C	Time Constant (A × B) (ΩF or Sec)	6.0	6.7
D	the maximum end-of-charge voltage (V)	3.8	same as the left
E	the minimum end-of-discharge voltage (V)	2.2	same as the left
F	Configuration of SC2	One Capacitor-cell	same as the left
G	Configuration of SC1	10 Capacitor-cells in parallel	same as the left
H	Maximum Time Constant of Inequality (11) (ΩF or Sec)	2.17 (N = 10, M = 0.9, Tx = 10)	—
I	Minimum Charging Time (T_1) of Equation (9) (sec)	27.6	30.8
J	Ambient temperature	Room Temperature	same as the left

Table 4. Cells Data of SC1.

Capacitor Cell NO.	1	2	3	4	5	6	7	8	9	10	Average
Capacitance (F)	37.8	38.0	37.7	37.9	37.9	37.7	37.6	37.4	37.8	37.7	37.75
Internal Resistance (mΩ)	185	173	182	185	181	177	201	179	180	215	185.8

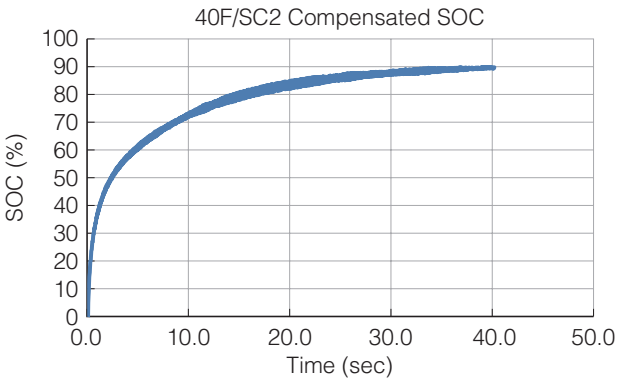

Fig. 16. Compensated SOC from Closed Circuit Voltage of SC2/40F.

corrected OCV in the same way as the preceding paragraph. The SOC at 10 seconds reaches only 72% from Fig. 16. The result proved what mathematical models predicted. In order to confirm the time when an actual SOC reached 90%, the duration of charging was expanded up to 40 seconds. We show the expanded characteristic in Fig. 16. It took 35.5 seconds until the SOC reached 90%.

Regarding the shortest charging time, Table 3 shows the theoretical time which is 27.6 seconds, and the expected time of experimental sample is 30.8 seconds. The experimental result was 35.5 seconds which was 4.7 seconds larger than the calculated value. The capacitance of SC2 used in the experiment was 39 F so that the total capacitance of SC1 was expected 390 F which was supposed to be 10 times as large as that of SC2. However, from the data in Table 4, the variation of the supercapacitors used for SC1 was larger than that of 80 F also the total capacitance of SC1 was 377.5 F which was smaller than that of expectation.

With regard to N, a total capacitance of SC1 in a charging system is not always N times as large as SC2 because of the large variation of capacitance among SC1-cells. If we express N as Np in the actual system, Np is defined as Np = (Actual accumulated capacitance of SC1) ÷ (Capacitance of SC2). In this experiment, N p = 377.5 / 39 = 9.679. Therefore, Np is smaller than N. The actual peak value of inrush current becomes also less than the value based on substituting N into Eq. (5), so that the charging time will qualitatively increase. If N in Eq. (5) is replaced with Np, the minimum charging time will result in T 1 = 33.2 from Eq. (9) and a delay will be 35.5 − 33.2 = 2.3 seconds. As the observed delay was 4.7 seconds, the remaining delay of 4.7 − 2.3 = 2.4 seconds requires to be analyzed. It seems to be considered that the causes of delay 2.4 seconds are as follows: the causes are wiring resistance, variation of internal resistance of SC1-cells as shown in Table 4, the observational error of "Charging time" versus "SOC"—this is the biggest factor in the experiment, however, too difficult to cancel because of the saturated curve of OCV— and others.

The time constant of SC2 applied to this experiment is 6.7 seconds. It means the value of CCV at 6.7 seconds is theoretically 63% of final saturated CCV. Therefore, the time constant (6.7) seems to be large—large internal resistance—for 90% SOC. Moreover, it is important to prevent the large variation from the supercapacitor-cells that are used in SC1 and SC2, also to minimize the variation of capacitance among the cells of SC1.

Based on the results of experiments, the mathematical model is useful to obtain design guidelines. It is also useful as a means to analyze the actual examples if there are differences between the examples and design guidelines.

5. Conclusion

When supercapacitors as well as secondary batteries are charged, the word "rapid charging" is an abstract

expression. Some people say that charging time is rapid in several tens of minutes, others say in one minute or in ten seconds. In order to dispel such an abstract concept, the mathematical model to determine the charging time quantitatively is proposed in this paper.

As a charging method, we have selected Flash Charging Method which can implement the rapid charging supercapacitors inexpensively. In order to create design guidelines for charging supercapacitors with Flash Charging Method, we have established some mathematical models and obtained effective formulas. It was taken several steps to find the formula which was representing the relationship between "desired charging rate" and "the shortest charging time."

First, the theoretical equation of "charging current" versus "charging time" was obtained by creating the vector diagram in Fig. 9. Next, since we were able to erase the terms of *maximum end-of-charge voltage* and *minimum end-of-discharge voltage* in equations, the formula—representing the shortest charging time T1—has been simplified. In order to build the design guideline, we prepared four kinds of parameters; the first one was time constant $C \times R$ of SC2, which was the product of the capacitance C and the internal resistance R in a capacitor-cell, the second one was N, which was the number of the parallel connection in SC1, the third one was M, which represented the desired charging rate, the fourth one was Tx, which was "the maximum allowable charging time." As "N", "M", and Tx are decided by a system designer, the mathematical models provide—before building a charging system—a high degree of design freedom and the confirmed information for a designer. As a result of the experiments, the developed mathematical models are effective means which can organize a system to charge supercapacitors with Flash Charging Method.

One of the remaining issues is to confirm the supercapacitor's reliability evaluation in case of rapid charging. Since the peak of inrush current is large, it is indispensable, especially in case of LICs, to confirm whether some dendrite growth on lithium-metal will occur or not. If we need to suppress the inrush current, it is necessary to develop a charging circuit with the function so-called Soft Start. Soft Start is a technology that will prolong the charging time, and its mathematical model will be more important.

References

1) L. Lonoce, V. Holz and B. Warner, "Grid compatible flash charging technology," Session 3B-EV Charging Experience, 1st E-Mobility power system integration symposium, Berlin, 23 October, 2017
2) Kang Xu, Sheng P. Ding, and T. Richard Jow, "Toward reliable values of electrochemical stability limits for electrolytes", Journal of The Electrochemical Society, Vol.146 No.11 pp4172 - 4178, 1999
3) S. Yamashiro and K. Nakamura, "Innovative measurement method of EDLC's equivalent circuit constants," IEEJ Trans. on Power and Energy. Vol.132 No.5 pp.515-520,2012