Small DMFC for Portable Applications

Masakazu Ohashi[1], *Zhen* Guo[1], *Nianfang* Wang[1] and *KuoHao* Tseng[1]

Consumers' demand for commercial portable electronics such as laptop computers, digital cameras, PDAs and cell phones has driven the development of advanced portable power technologies in recent years. Direct methanol fuel cell (DMFC), with benefits such as high energy efficiency, quick start capability and instantaneous refueling, is a promising candidate for portable applications. A 10 W DMFC system has been developed at Fujikura. The system generates the 20 W peak power with external dimensions of 100 × 100 × 170 mm. Recent progress in the development of the small DMFC prototype is reported with emphasis on the fuel delivery subsystem and the gas/liquid separator.

1. Introduction

Nearly all portable electronic devices are powered by primary and secondary batteries, and power consumption is often a performance bottleneck. Miniature fuel cells, with the possibility of achieving higher energy densities and instant refueling, present beneficial opportunities for use as a supplement to or as a substitute for batteries[1)]. Unlike primary and secondary cells, in which the reactants and products are contained within the cell, in fuel cells, reactants are continuously supplied to the cell and byproducts are continuously removed from it. A variety of materials may be suited for use as a fuel, depending on the materials chosen for the components of the cell. Among fuel cells, direct oxidation fuel cells (hereafter referred to as a DMFC), which generate power by directly supplying an organic fuel such as methanol to an anode for oxidation without reconverting it into hydrogen, are actively studied and developed.

One of the fundamental difficulties in developing DMFCs is managing fluid flow throughout the fuel cell system. First, methanol concentration must be well controlled to reduce methanol crossover, which is the process by which methanol is transported, by diffusion and electro-osmosis, from the anode through the electrolyte to the cathode, where it reacts directly with oxygen, so that no current is produced from the cell. Furthermore, methanol has a poisoning effect on the cathode catalyst, which results in reduced cell performance. The methanol crossover rate is roughly proportional to the methanol concentration at the anode; therefore, in order to reduce methanol crossover, it is necessary to regulate the methanol feed concentration. In practice, the fuel supplied to the anode of the DMFC must be a very dilute aqueous methanol solution (usually 2-5 wt% methanol). It is very clear that carrying water in the system significantly reduces the overall system energy density. Second, it is also well known that a forced air design with an external blower is unattractive for use in small fuel cell systems, and that the parasitic power losses from the blower are estimated at 20-25% of the total power output. Third, pumping excess amounts of water at the cell cathode back to the cell anode adds to the system complexity and cost.

1 Thermal technology division, R & D Department

2. Operation principle

A direct oxidation fuel cell has a unit cell composed of a membrane-electrode assembly (MEA) sandwiched between separators. The MEA is composed of a solid polymer electrolyte membrane sandwiched between an anode and a cathode, and each anode and cathode includes a catalyst layer and a diffusion layer. Such a direct oxidation fuel cell generates power by supplying fuel and water to the anode and supplying oxidant to the cathode (see Fig.1).

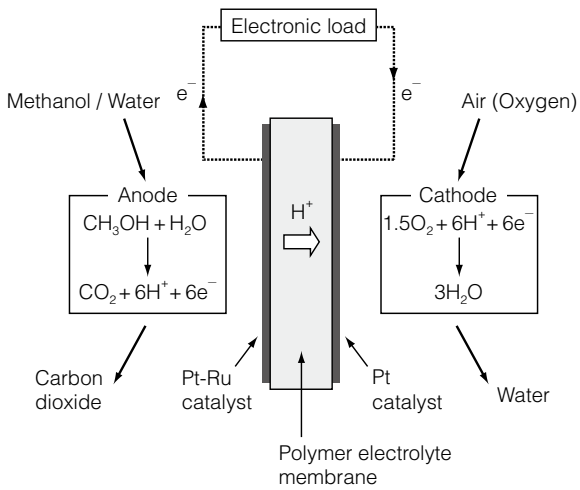

Fig. 1. Principles of direct methanol fuel cell.

Panel 1. Abbreviations, Acronyms, and Terms.

PDA—Protable Desktop Accessary

Secondary Cells—Rechargeble Battery

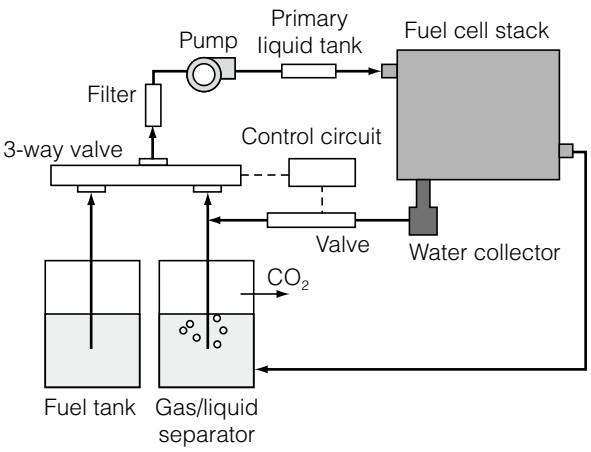

Fig. 2. The diagram of the small DMFC system design.

We have developed a DMFC system with optimal power performance and minimal production costs. Aside from the complexity of system construction, this novel system design is a clear winner over the conventional DMFC system design for portable applications. In addition to optimizing the fuel cell system operating performance, there are many other issues to be considered in developing a complete miniaturized liquid feed fuel cell system. These issues include liquid fuel storage, air supply, fuel delivery, water management and thermal management, operating orientation and stability. Our DMFC system considers each of these aspects.

3. Progress in the development of the small DMFC prototype

A 10 W DMFC system has been developed at Fujikura. The system generates a 20 W peak power with external dimensions of 100 × 100 × 170 mm. Recent progress in the development of a small DMFC prototype is reported herein with an emphasis on fuel delivery subsystem and gas/liquid separator.

(1) Fuel delivery system

Our DMFC system design is illustrated in Fig.2, which includes a fuel cell stack, fuel tank, gas/liquid separator and a fuel delivery subsystem. Fuel is delivered to the fuel cell stack by the single pump that is coupled to a three-way valve. The valve is controlled by a processor unit that will retrieve information regarding system operation and will issue commands signaling the settings for the valve, depending on the mode of operation of the system. The fuel supply for the system is contained in a gas/liquid separator and a methanol tank. The high-concentration fuel in the methanol tank is greater than 50 to 100% (neat) methanol and the low-concentration fuel in the gas/liquid separator typically ranges from about 1 to 50% methanol.

The three-way valve switches between the low-concentration fuel in gas/liquid separator and high-concentration fuel in the methanol tank. The common port of the three-way valve is connected to the inlet of the pump. The pump can suck flow from either the second port in one position that communicates with the methanol tank or the third port in another position that communicates with the gas/liquid separator. The valve switches between either dosing fuel from the reservoirs (via the second port) or recirculation of unreacted fuel from the anode recirculation loop (via the third port). The valve is positioned in such a manner that it normally allows fuel from the low-concentration reservoir (gas/liquid separator) to flow from the third port of the valve to the fuel cell stack. It may also be necessary to dose fresh fuel from the methanol tank into the anode recirculation loop. In this case, the valve can be set to select high-concentration fuel from the methanol tank, so that there is fluid flow between the second port of the valve and the fuel cell stack in a short time period. Alternatively, to provide for a predetermined concentration that falls between the low and high values, the valve can be pulsed between opening the second port and the third port in such a manner that a fuel mixture is delivered via the valve. More particularly, an anode recirculation loop receives unreacted fuel from the anode portions of the cells in the fuel cell stack. The unreacted fuel exits the stack and is then passed through the gas/liquid separator and an optional fuel filter. The filter removes any particulates or debris that may have been picked up in the stack or through the conduits of the system. The filtered fuel is then sent through a liquid buffer, if desired. This liquid buffer is composed of hydrophilic foam. The single pump and a three-way valve subsystem yields a smaller total system size and lower electrical parasitic loss than, for example, in a multipump design.

(2) Gas/liquid separator

In a DMFC, exhaust products, comprising excess amounts of liquid methanol, water and CO_2, removed from the anode of the fuel cell stack maybe separated to provide a recycled supply of methanol and water. The separation of gases from liquids in mixed-phase

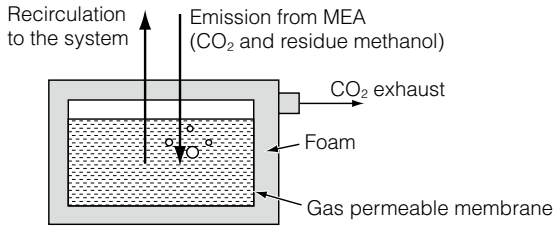

Fig. 3. Gas/liquid separator.

Fig. 4. Prototype of the small DMFC.

systems, which are generally incapable of being used in any orientation, has traditionally relied on gravity. Therefore, providing a truly portable direct methanol fuel cell has been problematic with existing gas/liquid separators.

A novel gas/liquid separator that is constructed from a gas permeable, hydrophobic membrane material is provided as shown in Fig.3. An inlet to the reservoir admits a mixed-phase material. The first outlet that is in communication with the fuel delivery subsystem is provided for liquid transfer. The second outlet is provided for CO_2 exhausting. The gas permeable membrane comprises a polytetrafluoroethylene (PTFE) material. The PTFE may be laminated with a woven polymer or other suitable material for strength. A hydrophobic expanded PTFE (e-PTFE) is capable of separating air from water and CO_2 from water/methanol solutions.

In operation, the mixed-phase material from the recirculated anode loop solution of methanol, water and CO_2 gas in a DMFC enters the reservoir through the inlet. The pressure accumulated in the reservoir drives

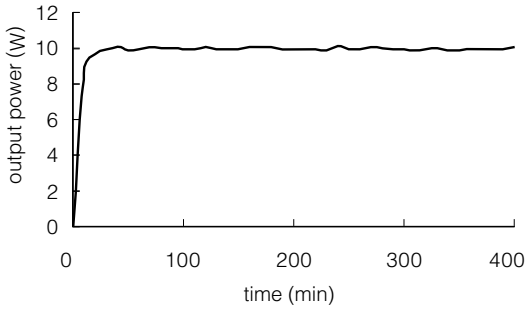

Fig. 5. The small DMFC output power vs. time at room temperature.

the CO_2 gas and some trace water and methanol vapor through the porous membrane. The gas is expelled from the reservoir to the interior of the reservoir compartment that is filled with porous foam. The gas is then removed from the reservoir compartment through the exhaust port.

(3) Evaluation of the DMFC system

Our small DMFC prototype is developed for providing DC power between 10 and 20 W range, as shown in Fig.4. It can be used to power electric devices such laptop computers, mobile TV, portable DVD player and PDA. The external dimensions are 100 × 100 × 170 mm. Figure 5 shows the DMFC prototype power output versus time, where the fuel cell performs on a constant power mode. The fuel cell power output is very stable over time. This experiment was conducted at room temperature of 25 °C and relative humidity of 70%. The fuel cell was also tested in different directions. The results showed that the orientation has no significant effects on the fuel cell performance. The exhausting gas from the fuel cell was analyzed, and no significant amount of methanol has been found.

4. Conclusion

A small DMFC with stable output power of 10 W has been successfully developed. The long-term stability of the system has been demonstrated. The future work will be focused on optimizing each component and miniaturizing the system.

Reference

1) A. Schmitz, M. Tranitz, S. Wagner, R. Hahn, C. Hebling: "Planar self-breathing fuel Cells," Journal of Power Sources, Vol.118, pp.162-171, 2003