Low-friction and Abrasion-resistant Optical Drop Cables/Super Low Friction Optical Indoor Cables

Satoru Shiobara,[1] *Naoki* Okada,[1] *Tsuyoshi* Shimomichi,[1] *Daiki* Takeda,[1]
Akira Murata,[2] and *Mizuki* Isaji[2]

The number of aerial optical cable installations has increased rapidly because of the growth of the fiber-to-the-home (FTTH) market. Therefore, a lot of optical drop cables are installed in a supporting wire, generally, by using a spiral hanger. During installation, because the optical drop cables are found rubbing each other in the same spiral hanger, a material with both low-friction and abrasion-resistance performance is required for the sheath. For this reason, we recently developed the low-friction and abrasion-resistant optical drop cables. Moreover, to make the passing through of the conduit line easier, we also developed super low friction optical indoor cables.

1. Introduction

The number of aerial optical cable installations has increased rapidly due to the growth of FTTH market in Japan. In urban area, with several FTTH subscribers, utility poles may not be sufficient to accommodate a large number of optical cable installations using their own supporting wires. Therefore a lot of optical drop cables are installed in a supporting wire by using a spiral hanger.

During installation using spiral hanger, frictions among drop cables are unavoidable.

Also, in residential premises, optical drop cables and indoor cables may be installed in a flexible plastic conduit line which is called the CD pipe. If the conduit line has many bending shapes, it may be necessary to use lubricants to lessen the friction. For these reasons, Fujikura recently developed the low-friction and abrasion-resistant optical drop cables and the super low friction optical indoor cables.

For the development of low-friction and abrasion-resistant optical drop cables, Fujikura studied a new sheath of material with excellent abrasion-resistant and low-friction property. Also, for the development of super low friction indoor cables, Fujikura studied new additives to be added into the current halogen-free flame-retardant plastic sheath.

2. Low-friction and abrasion-resistant optical drop cables

2.1 Structures of low-friction and abrasion-resistant optical drop cables

Figure 1 shows the wiring model of optical drop cable in Japan. At the aerial closure, aerial access cables with a few optical fibers (e.g., eight-fiber) or ribbon-type drop cables branch out from the trunk line cables. In the drop closure, aerial access cables or ribbon-type drop cables are spliced into one-fiber or two-fiber drop cables using mid-span branching method. Then drop cables with one or two fibers are drawn into the residential premises. These optical cables are installed using a spiral hanger. To aim for an easier installation work, Fujikura developed optical drop cables with the high-strength sheath, which has excellent properties of low friction and high abrasion resistance. The developed cables were two-fiber drop cables and ribbon-type eight-fiber drop cables.

2.1.1 Structure of two-fiber drop cable

Figure 2 shows a cross section of the newly developed two-fiber optical drop cable. This cable consists of a cable section (the optical fiber part) and a support section (the supporting wire part). These sections are linked together by a small web. The cable section contains two single-mode optical fibers and two nonmetallic strength members made of Aramid FRP. The outer diameter of the optical fiber is approximately 0.25 mm, and FutureGuide-SR15 is used as a silica fiber to enhance its bending properties. The support section consists of a supporting wire made of a galvanized steel wire. These sections are sheathed with the halogen-free and flame-retardant polyolefin sheath with excellent properties of low friction and high abrasion resistance. To take out optical fibers easily, the positions of the notches were shifted from the position of fibers to horizontal alternate direction. The outer diameters of the cable are about 2.0 mm ×

1 Optical Cable System R&D Center
2 Optical Technology Department of Optics and Electronics Laboratory

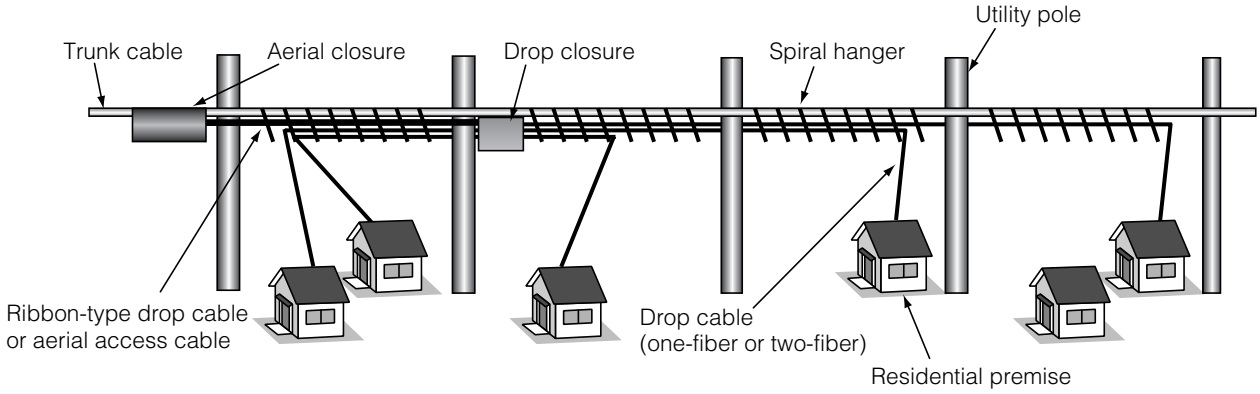

Fig. 1. Wiring model of optical drop cables.

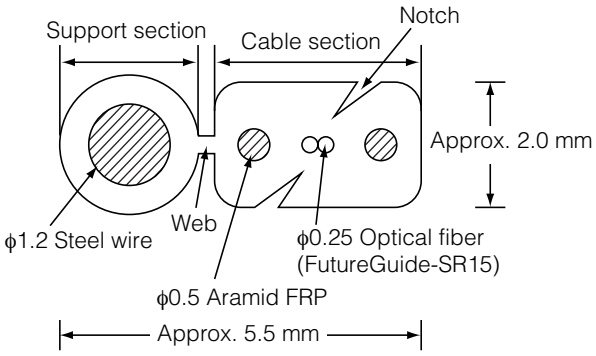

Fig. 2. Structure of two-fiber optical drop cable.

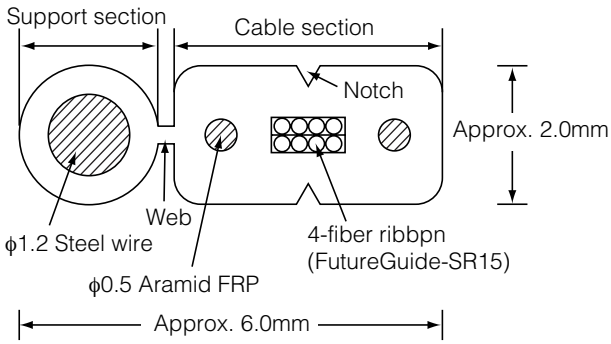

Fig. 3. Structure of eight-fiber optical drop cable.

5.5 mm. These sizes are equal to conventional one- or two-fiber optical drop cables.

2.1.2 Structure of ribbon-type eight-fiber drop cable

Figure 3 shows a cross section of the newly developed ribbon-type eight-fiber optical drop cable. The cable section consists of two pieces of four-fiber ribbon. FutureGuide-SR15 is used to enhance its bending properties. The outer diameters of cable are about 2.0 mm × 6.0 mm. These sizes are equal to conventional ribbon-type optical drop cables.

2.2 Study of low-friction and abrasion-resistant sheath material

The new sheath material for low-friction and abrasion-resistant optical drop cable has the following properties.

① Low-friction property

The friction coefficient of the new sheath is aimed at 1/2 of or less than the conventional optical drop cable friction.

② Abrasion-resistant property

The thickness of sheath is decreased due to abrasion test (refer to Fig. 6). Hereafter, it is described as abrasion thickness in this paper. The new sheath material must be able to achieve 1/2 of or less than the conventional cable abrasion thickness. In addition, it aimed at reducing the abrasion thickness as much as possible.

③ Reliability

The new sheath material must be as reliable as a conventional optical cable sheath material in terms of heat aging, weather resistance and chemical resistance, etc.

④ Properties of optical drop cables

The newly developed cables must have the optical transmission characteristics, the mechanical characteristics, and the environmental characteristics equivalent to those of the conventional cables.

Table 1. Low-friction and abrasion-resistant sheath material for trial cables.

Sheath	Base resin	Remarks
Sheath A	Polyolefin resin A	Halogen-free flame-retardant was added
Sheath B	Polyolefin resin B	Halogen-free flame-retardant was added
Sheath C	Polyolefin resin C	Halogen-free flame-retardant was added

The sheath materials we studied are shown in Table 1. These types of materials added to halogen-free flame-retardant additives are hard and durable enough.

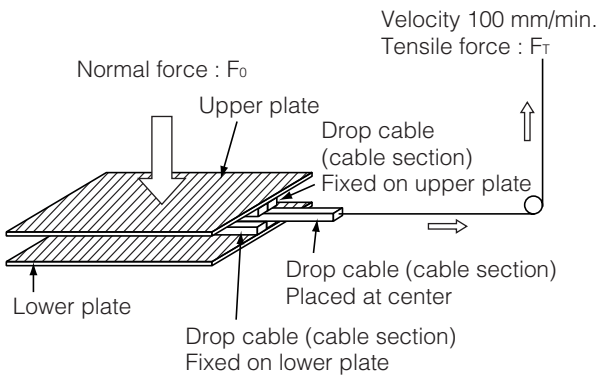

Fig. 4. Test apparatus of friction coefficient.

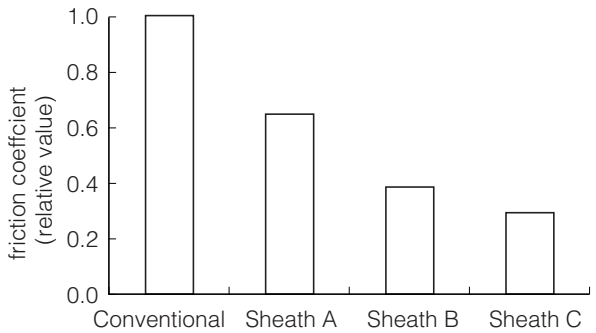

Fig. 5. The Results of friction coefficient.

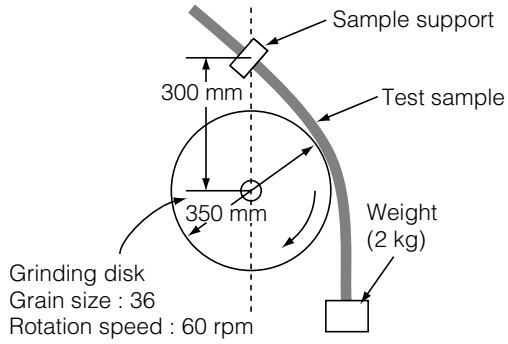

Fig. 6. Test apparatus of abrasion-resistant test.

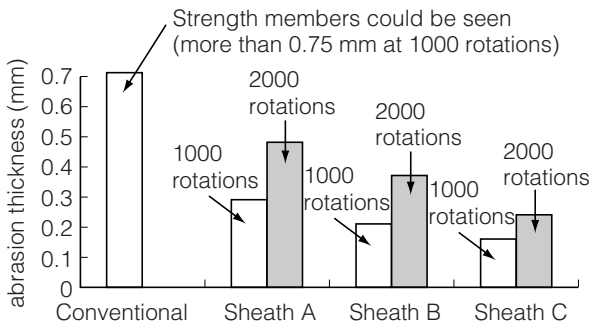

Fig. 7. The results of abrasion-resistant test.

2.2.1 The measurement of friction coefficient and the results

Figure 4 shows the method of friction coefficient measurement. This experiment method simulated the situation in which the cables rub each other in the same spiral hanger.

The optical drop cable is divided into a cable section and a support section. The cable section is used for measuring the friction coefficient. The test sample is placed between the two plates. Each plate has two drop cables attached to it. With this method, friction of drop cables inside the spiral hanger can be ensured. The sample placed at the center is pulled once with the velocity of 100 mm/min by the pulling machine and the tensile force is measured. The coefficient of friction is given by the following formula:

$$\mu = \frac{F_T}{F_0} \quad \cdots\cdots\cdots\cdots\cdots\cdots\cdots\cdots\cdots (1)$$

where μ is dynamical friction coefficient, F_T is the tensile force, F_0 is the normal force.

Figure 5 shows the results of friction coefficient of the trial cables with sheathes made from material A, B, C, or conventional material. The numerical values in the graph are relative values as the friction coefficient of conventional cable is assumed to be "1". The friction coefficient of cable with sheath C was the lowest, and it was approximately 1/3 of the conventional cable.

2.2.2 The measurement of abrasion resistance and the results

The abrasion thickness of trial cables was measured in accordance with JIS C3005, 4.29 "The test experimental methods for rubber or plastic insulated wire and cables." The test apparatus and method are shown in Fig. 6. The optical drop cable is divided into a cable section and a support section. The cable section is used for testing the sample and for measuring the abrasion thickness. When the grinding disk turned to 1000 rotations and 2000 rotations, the abrasion thickness was measured. Figure 7 shows the results of abrasion-resistant test of the trial cables. Strength members of the conventional cable could be seen in less than 1000 rotations. The abrasion thickness of conventional cable was estimated to be 0.75 mm or more in 1000 rotations. The cables with sheath A, B, or C have better properties than conventional cables. The abrasion thickness of the sheath C cable is smallest, and it is about 0.25 mm at 2000 rotations.

2.2.3 The reliability of the low-friction and abrasion-resistant sheath material

From the results of friction coefficient test and abrasion test, we confirmed that the cable with sheath C has the best properties. We also conducted

Table 2. Reliability test results of the low-friction and abrasion-resistant sheath.

Item	Condition	Results	
		Tensile strength (retention)	Elongation (retention)
Weather resistance	Super UV meter (equivalent for 20 years)	>75%	>85%
Heat aging	100°C × 60 days	>70%	>80%
Oil resistance	No. 2 oil 50°C × 50 days	>90%	>90%
Chemical resistance	HCl (10%) 50°C × 50 days	>85%	>85%
	H_2SO_4 (10%) 50°C × 50 days	>85%	>85%
	NaOH (3%) 50°C × 50 days	>85%	>85%

Table 3. Characteristics of low-friction and abrasion-resistant optical drop cables.

Items	Condition	Two-fiber cable	Eight-fiber cable
Transmission loss	1310 nm	<0.35 dB/km	<0.35 dB/km
	1550 nm	<0.25 dB/km	<0.25 dB/km
Bending	Two-fiber cable R=15mm / Eight-fiber cable R=30mm	<0.01 dB	<0.01 dB
Crush	1200 N/25 mm	<0.01 dB	<0.01 dB
Impact	0.3 kg × 1 m	<0.01 dB	<0.01 dB
Twist	±90°/m	<0.01 dB	<0.01 dB
Squeezing	700 N, R=250 mm, 90°	<0.01 dB	<0.01 dB
Flame test	JIS C3005 (60° inclination)	Passed (reduced inflammation)	Passed (reduced inflammation)

long-term reliability tests such as heat aging, weather resistance, chemical resistance (HCl, H_2SO_4, NaOH), and oil resistance test on sheath C, and excellent results were obtained. The results of reliability tests are shown in Table 2.

2.3 The characteristics of trial cables

We made a two-fiber drop cable and eight-fiber ribbon-type drop cable for trial such as shown in Figs. 2 and 3 using the compound C as sheath material. These trial drop cables were evaluated for their optical, mechanical, and environmental characteristics. Then it is confirmed that those performances were excellent in all tests. The test results are shown in Table 3, and Figs. 8 and 9.

2.4 Conclusions on the low-friction and abrasion-resistant optical drop cables

We have developed the low-friction and abrasion-resistant optical drop cables and achieved approximately 1/3 of friction coefficient and approximately 1/3 of the abrasion thickness compared with conventional drop cables. These drop cables are most suitable for multiple installation in a supporting wire and are also capable of passing through conduit line easily.

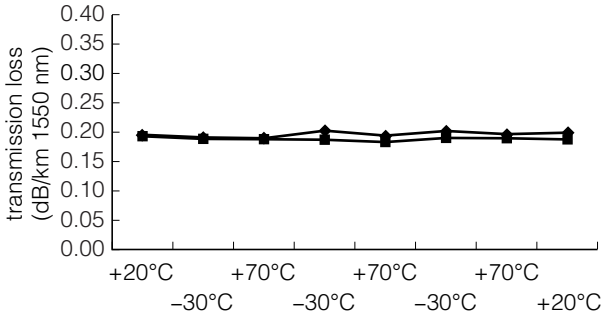

Fig. 8. The results of temparature cycling test of two-fiber drop cable.

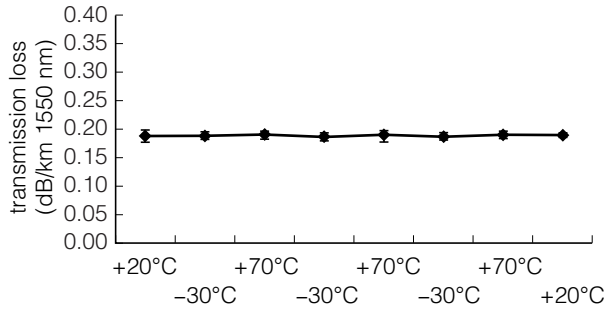

Fig. 9. The results of temparature cycling test of eight-fiber drop cable.

3. Super low friction optical indoor cables

3.1 Structures of super low friction optical indoor cables

The optical indoor cables are installed on the walls of the rooms in residential premises and also on the walls with flexible plastic conduits. CD pipes and PF pipes, commonly used in Japan, having 16 mm internal diameter are generally used for conduit line installation. If the conduit line has many bending shapes, the tension to pull the cable inside into the conduit line will increase due to high friction coefficient. However, it is also important to note that optical indoor cable has much lower permissible tension compared to optical drop cable. It is because optical indoor cable does not have supporting wire, unlike optical drop cable. Therefore, Fujikura developed super low friction optical indoor cables to reduce the friction inside the conduit line.

The developed cables are one-fiber indoor cables and eight-fiber indoor cables used in the detached houses and condominiums, respectively. The structures of these cables are shown in Figs.10 and 11. FutureGuide-SR15 is used for the single-mode optical fibers and steel wires having 0.4 mm outside diame-

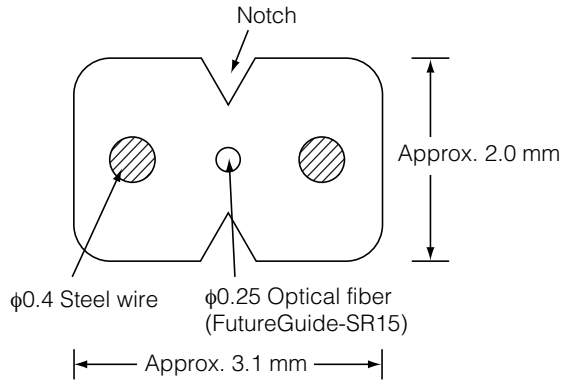

Fig. 10. Structure of one-fiber optical indoor cable.

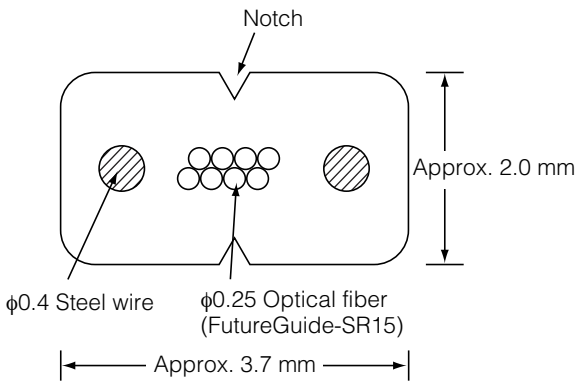

Fig. 11. Structure of eight-fiber optical indoor cable.

Table 4. Super low friction sheath material for trial cables.

Sheath	Base resin	Flame-retardant additives	Low friction additives
Sheath D	Etylen copolymar	Halogen-free	Additive i
Sheath E	Etylen copolymar	Halogen-free	Additive ii
Sheath F	Etylen copolymar	Halogen-free	Additive iii

ter are used for the strength members.

3.2 Study of super low friction material

Table 4 shows the low friction materials that we studied. These are the materials with various low friction additives added to the halogen-free flame-retardant polyolefin resin.

Figure 12 shows the method of the friction coefficient measurement. The measurement method is in accordance with JIS K7125. The sample sheet made from several low friction materials is placed between the load and base sheet. The base sheet is made from PVC pipe to simulate the situations of rubbing between the indoor cable and plastic conduit line.

The results of friction coefficient test are shown in Fig.13. The friction coefficients of sheath D, E, and F are lower than that of conventional sheath material. The friction coefficient of sheath F is the lowest, about 1/5 of coefficient of the conventional sheath. It is confirmed that the sheath F had an excellent property of low friction.

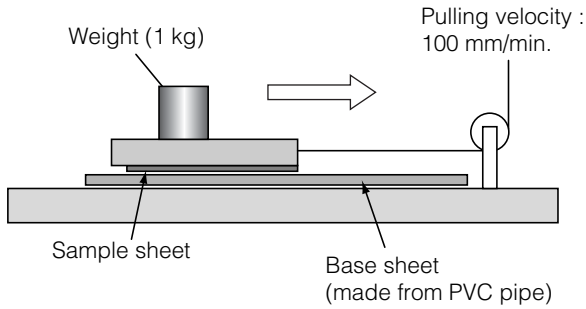

Fig. 12. Test apparatus of friction coefficient.

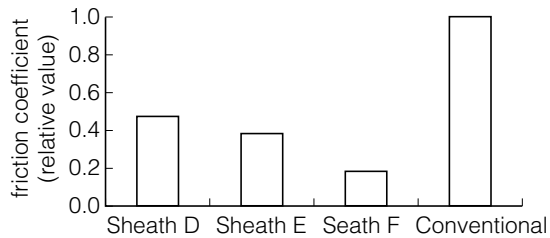

Fig. 13. The results of friction coefficient.

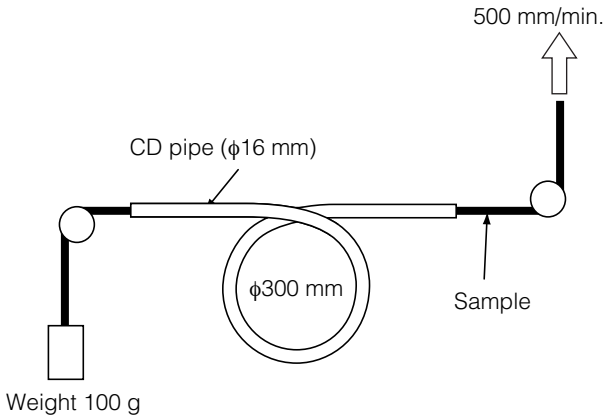

Fig. 14. Test apparatus of friction coefficient between cable sheath and conduit.

3.3 The evaluations of trial cables

3.3.1 The results of friction experiment with CD pipe

Figure 14 shows the method of friction coefficient measurement between the CD pipe having 16 mm internal diameter and the trial cable. The friction coefficient was given by following formula:

$$\mu = \frac{1}{\theta} \log_e \left(\frac{F_t}{F_b} \right) \quad \cdots\cdots\cdots\cdots (2)$$

where θ is the number of turns × 2π, F_t is the tensile force of pulling, F_b is the mass of weight. F_t is measured when the trial cables are pulled from the CD pipe using tensile force measuring machine.

The results are shown in Figs.15 and 16. The friction coefficient of trial cable was about 1/7 of the conventional cable. The pulling tensile force was about

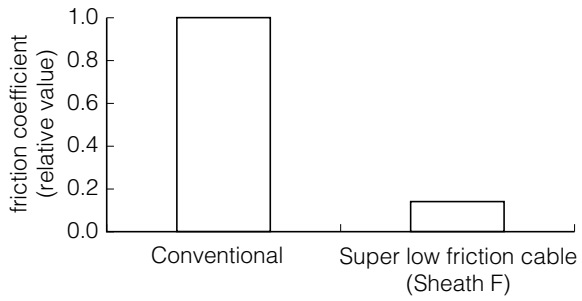

Fig. 15. The results of friction coeffcient.

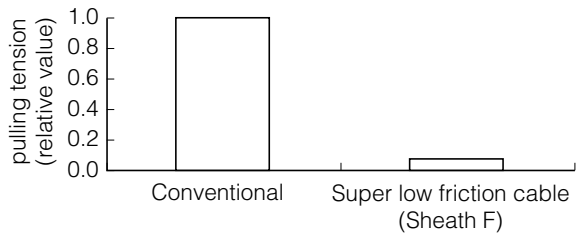

Fig. 16. The results of pulling tension.

1/10 of the conventional cable. It is confirmed that the friction of trial cable was greatly decreased.

3.3.2 The evaluation results of optical, mechanical, and environmental characteristics

One-fiber and eight-fiber indoor cables (shown in Figs. 10 and 11) are made using sheath F material. These cables were evaluated for optical, mechanical, and environmental characteristics. The evaluation results are shown in Table 5. This shows that these trial cables have excellent performance.

3.4 Conclusions on the super low friction optical indoor cable

The super low friction indoor cables were examined by adding various additives into halogen-free flame-retardant polyolefin resin for sheath material. As a result, the friction coefficient of 1/5 or less than that of the conventional cable was obtained by adoption of sheath F added additive iii. Also, the required tensile force required for the optical indoor cable to pass through the conduit line was able to decrease greatly.

Table 5. Characteristics of super low friction optical indoor cables.

Item	Condition	One-fiber cable	Eight-fiber cable
Transmission loss	1310 nm	<0.35 dB/km	<0.35 dB/km
	1550 nm	<0.25 dB/km	<0.25 dB/km
Temparature cycling	−10°C / +60°C × 3 cycles 1550 nm	<0.02 dB/km	<0.02 dB/km
Bending	One-fiber : R=15 mm, Eight-fiber : R=30 mm	<0.01 dB	<0.01 dB
Crush	1200 N/25 mm	<0.01 dB	<0.01 dB
Impact	0.3 kg × 1 m	<0.01 dB	<0.01 dB
Twist	±90°/m	<0.01 dB	<0.01 dB
Flame test	JIS C3005 (60° inclination)	Passed (reduced inflammation)	Passed (reduced inflammation)

4. Conclusion

Fujikura has developed the low-friction and abrasion-resistant optical drop cables and super low friction optical indoor cables to make the installation works easier. With the new material, the optical drop cable will have excellent low-friction and abrasion-resistance properties. Also, the optical indoor cable will have much lower friction property compared to conventional indoor cable. We want to increase the product variation that effectively used these features, and also to contribute to the construction of the optical communication network such as FTTH.