Low - Cost Optical Transceiver for PON Using Micro-BOSA

Koichiro Masuko[1], *Kenji* Nishide[2],
Susumu Nakaya[2], *Teijiro* Ori[2], *Osamu* Kikuchi[3],
Ryou Sekikawa[4] and *Daisuke* Shimura[4]

A novel micro-Bidirectional Optical Sub-Assembly (BOSA) has been developed in which optical transmitting and receiving functions are incorporated in a single TO-CAN package . A new compact and cost-effective Passive Optical Network (PON) Optical Network Unit (ONU) transceiver using the micro-BOSA has also been developed. Low-cost feature is achieved with a passive alignment technology and a simplified integrated structure of the micro-BOSA. Both electrical and optical characteristics are sufficient to comply with Gigabit Ethernet (GE)-PON ONU transceiver specification. In this paper, the structure and characteristics of the transceiver are reported.

1. Introduction

Fiber-to-the-home (FTTH) system is becoming widely used now. Passive Optical Network (PON) system will be commonly selected because of its cost-effectiveness. In the PON system, every subscriber is required to install an Optical Network Unit (ONU) at his/her home. Therefore, cost reduction of the ONU is essential. A major portion of the ONU cost comes from an optical transceiver, and, therefore, the cost reduction of the transceiver is most important.

We have developed a novel transceiver and an Optical Sub-Assembly (OSA), the key element of a transceiver, for Gigabit Ethernet-PON [1)] (GE-PON), which operates at 1 Gbit/s data rate using Ethernet technology. A newly developed compact and low-cost Bidirectional Optical Sub-Assembly (BOSA) [2)], called micro-BOSA, can make the transceiver a small form factor. The design of the transceiver was also optimized for the micro-BOSA, reducing its total cost.

The development was a joint work between Fujikura Ltd. and Oki Electric Industry Co., Ltd. The members of Oki Electric Industry took charge of the optical design and internal structure of the micro-BOSA [3)] under their Silicon microlens technologies [4)]. Optoelectronic Circuits & Systems R & D Center of Fujikura developed packaging and assembling of micro-BOSA and designed the optical transceiver.

1 Applied Electronics Technology Department of Optics and Electronics Laboratory
2 Optoelectronic Circuits & Systems R & D Center
3 Optical Module R & D Department of Optoelectronic Circuits & Systems R & D Center
4 Oki Electric Industry Co., Ltd.

2. Outline of the PON system

Figure 1 shows the outline of the PON system that is one of the FTTH systems. One optical fiber from a central office is divided by an optical splitter on the way to subscribers. Multiple subscribers can there-

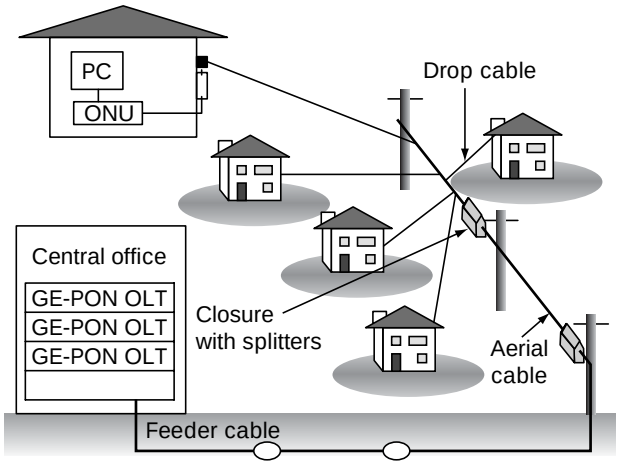

Fig.1. PON system.

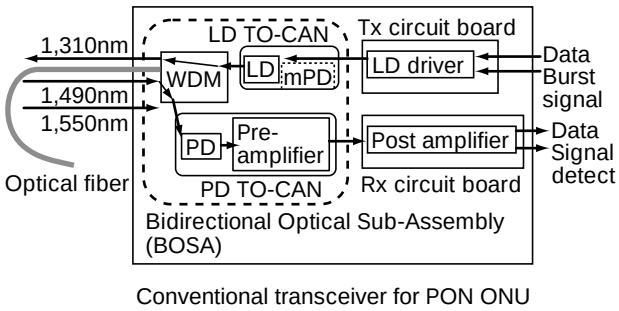

Fig.2. Block diagram of an ONU optical transceiver.

fore share an Optical Line Terminal (OLT) in the central office. Figure 2 shows the block diagram of a conventional GE-PON ONU transceiver. In this system, upstream signal is carried by a 1,310 nm wavelength light, and downstream signal is carried by a 1,490 nm wavelength light, so that a bidirectional communication is realized by a single optical fiber. Burst transmitting function to operate laser diode (LD) only during a requested period is also required for the ONUs because they share one OLT.

The function to shutoff a 1,550 nm signal is also required because a video service on 1,550 nm is planned in the future.

3. Structure of the proposed transceiver and the micro-BOSA

3.1. Conventional transceiver

Conventional transceiver generally uses a cubic optical module shown as BOSA in Fig. 3. In this type of module, a TO-CAN type LD and photodiode (PD) are attached to a cubic body. A Wavelength Division Multiplexing (WDM) filter is fixed inside the body so as to make a 45° angle to the LD and PD optical axis. So the module itself along with the circuit board of the optical transceiver becomes complicated. A pigtail fiber with an SC connector is usually attached to the BOSA. It results in high material and assembling cost.

3.2. Proposed optical transceiver

Figure 4 shows the appearance of the proposed optical transceiver. The transceiver is designed to comply with the Small Form Factor (SFF) Multisource Agreement (MSA) standard. An SC-type optical connector is mated to one end of the transceiver. Upstream signal is carried by a 1,310 nm wavelength light, and downstream signal is carried by a 1,490 nm wavelength light because the transceiver is designed for GE-PON ONU. The transmission data rate is 1.25 Gbit/s.

Figure 5 shows the internal structure of the product. A cylindrical object on the left side is the micro-BOSA and on the right side is a circuit board for the IC with an LD driver and a post amplifier for signal receiving.

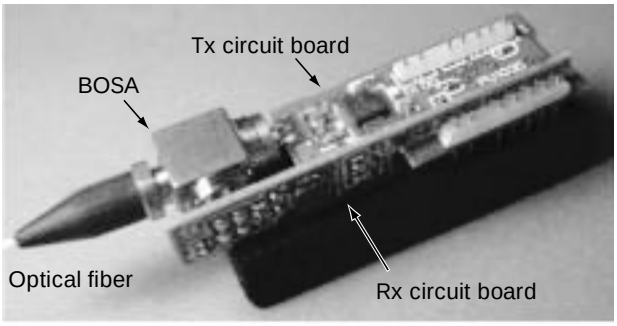

Fig.3. Example of a conventional transceiver.

3.3. Outer shape and internal structure of the micro-BOSA

Figure 6 shows a schematic diagram of the micro-BOSA chip. A silicon optical bench (SiOB) with optical devices, called micro-BOSA chip, is fixed in the micro-BOSA. An LD, a PD, Si microlens, a WDM filter, a transimpedance amplifier (TIA), and capacitors are mounted on the SiOB with passive alignment technologies. Upstream signal from an LD is collimated by an Si microlens, goes through a WDM filter, is condensed by a ball lens and coupled into an optical fiber. Downstream signal from the optical fiber is collimated by the ball lens, reflected by the WDM filter, condensed and bent a little downward by an Si

Fig.4. Outer shape of the proposed optical transceiver.

Fig.5. Internal structure of the proposed optical transceiver.

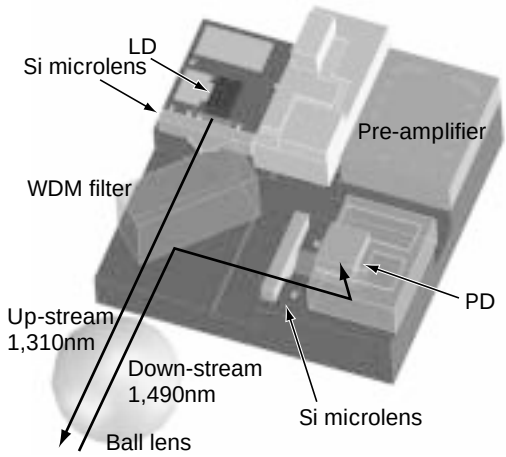

Fig.6. The micro-BOSA chip.

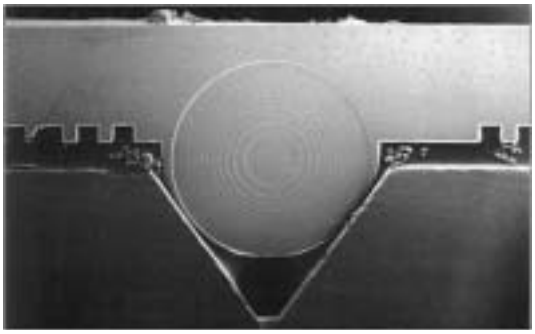

Fig.7. An Si microlens.

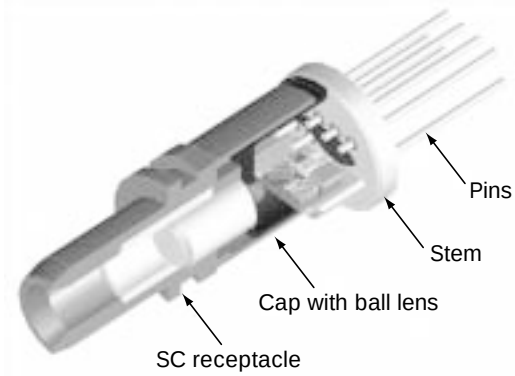

Fig.8. A cut model of the proposed micro-BOSA.

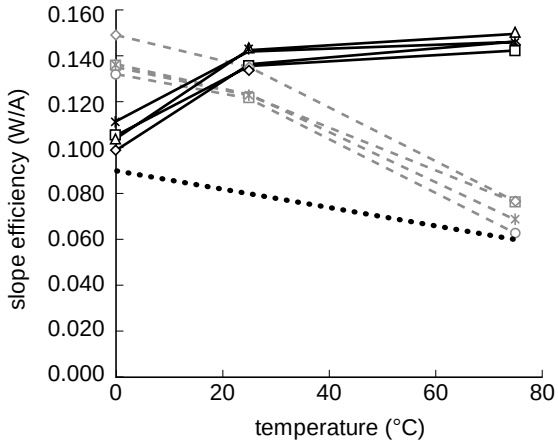

Fig.9. Temperature dependence of slope efficiencies.

microlens, reflected by a mirror on SiOB and coupled into a PD.

Figure 7 shows the details of the Si microlens that is a kind of diffractive lens.[4] The lenses can be fabricated in wafer scale based on the conventional Si LSI fabrication technology so that the form can be controlled very precisely.

An LD coupling efficiency is designed to be 30% for this micro-BOSA, but a coupling efficiency higher than 50% can be achieved. The Si microlens can be placed precisely on a V-groove fabricated by orientation-dependent etching on the SiOB because the outer shape of Si microlens is also precise. The outer shape is fabricated using MEMS technologies.

Figure 8 shows a cut model of the micro-BOSA. The micro-BOSA chip is attached to the ledge of a stem. Electric pads and pins are connected by gold wires and hermetically sealed by a cap with a ball lens. Finally, an SC receptacle is aligned and attached by YAG welding. The outer shape just looks like a Transmitter OSA (TOSA) or a Receiver OSA (ROSA), but in this case, optical transmitting and receiving functions are incorporated in one OSA.

In this micro-BOSA, it is important to suppress a cross talk because an LD and a PD are packaged in a single TO-CAN package. A TO-CAN cap with a ball lens is designed whose inside surface is finished with a low-reflection coat. We also put a resin on the stem to absorb LD emission from a rear facet. With these features, an optical cross talk is suppressed efficiently.

To shutoff 1,550 nm or longer wavelength, another optical filter is attached onto an SC receptacle facet near the ball lens. So this micro-BOSA can be used in the system with video delivery.

3.4. Optical design

Optical system of the micro-BOSA is designed in consideration of the wavelength dependence of an Si microlens. In the optical system, the focal length gets shorter as the wavelength gets longer. On the contrary, the wavelength of an FP-LD gets longer and efficiency gets lower as the temperature gets higher.

Considering these characteristics, we align the optical devices to achieve the highest coupling efficiency at a high temperature, which means a longer wavelength and a reduced operation current at a high temperature.

Figure 9 shows examples of LD coupling efficiencies. Dashed lines represent the efficiencies of the samples optimized at room temperature. Solid lines represent the ones optimized at high temperature. Dotted line shows assumed characteristics without the wavelength dependence of the Si microlens. At a low temperature, LD can be driven easily with a high current to get a high power, so we choose the optical design optimized at high temperature as the solid lines.

4. Characteristics of fabricated samples

4.1. Characteristics of the micro-BOSA

Table 1 shows optical and electrical characteristics of the fabricated micro-BOSA at room temperature. They are good enough and the internal cross talk is also suppressed efficiently.

4.2. Characteristics of a transceiver

An optical transceiver with the developed micro-BOSA was designed and fabricated. Figure 10 shows

Table 1. Characteristics of the micro-BOSA.

Parameter	Unit	Value
Threshold current	mA	8.0
Slope efficiency	mW/A	137
Optical return loss (1,490 nm)	dB	>50
Optical return loss (1,550 nm)	dB	42
Optical return loss (1,310 nm)	dB	13
Optical cut filter loss (1,550 nm to PD)	dB	43
Optical isolation (1,310 nm LD to PD)	dB	49

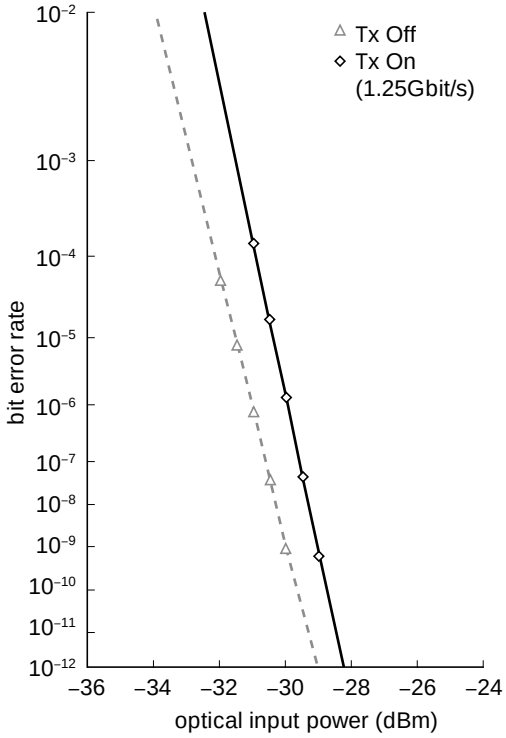

Fig.10. Receiver characteristics at 25°C.

Table 2. Temperature dependence of minimum receiver sensitivity.

Temp.	0°C	25°C	70°C
Tx Off	–29.3 dBm	–29.1 dBm	–28.6 dBm
Tx On	–28.4 dBm	–28.3 dBm	–27.8 dBm

receiver's bit error rate (BER) characteristics under PRBS 2^7–1 and 25°C. An LD is operated at 1.5 dBm output power, 1.25 Gbit/s data rate on the condition that the transmitter (Tx) is on. Table 2 shows their temperature dependence.

Minimum receiver sensitivity at BER of 10^{-12} was –29.1 dBm when the transmitter was disabled, but –28.4 dBm when the transmitter was operated.

Figure 11 shows the optical waveform at 1.25 Gbit/s of transmitter. Mask margin is 50%. Figure 12 shows a burst optical output waveform of the transmitter. The rise time is 5 ns with enough margins.

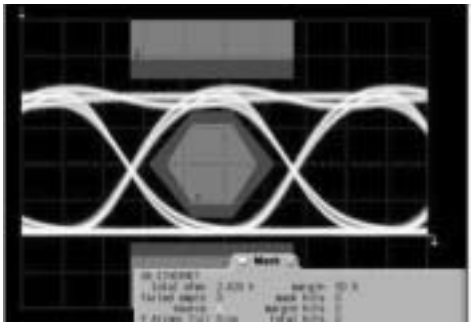

Fig.11. Transmitter waveform at 1.25 Gbit/s.

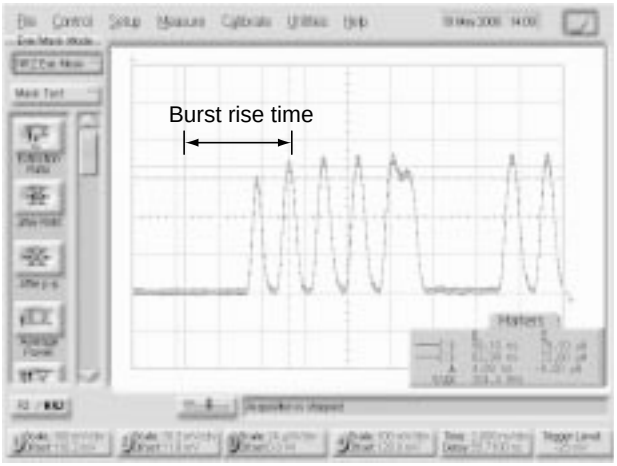

Fig.12. Burst optical output waveform at 1.25 Gbit/s.

5. Conclusion

A new micro-BOSA where optical transmitting and receiving functions are incorporated in a single TO coaxial OSA has been developed. A SFF transceiver for PON ONU with the micro-BOSA has also been developed. Highly simplified and integrated structure and the low-cost feature of the micro-BOSA were realized by passive alignment technologies. The characteristics of the transceiver with the micro-BOSA were good enough for GE-PON ONU.

References

1) IEEE 802.3ah
2) K. Masuko, et al.: A Low Cost PON Transceiver Using Single TO-CAN Type micro-BOSA, Proc. of Electronic Components and Technology Conference, s24 p.4, 2006
3) H. Sasaki, et al. : A low-cost micro-BOSA using Si microlens integrated on Si optical bench for PON application, Proc. of Optical Fiber Conferences, OWL6, 2006
4) M. Uekawa, et al. : Surface-mountable silicon microlens for low-cost laser modules, IEEE. Photonics Tech. Lett., Vol. 15, pp. 945-947, 2003