SFF and SFP Optical Transceivers

Shinya Abe*, *Hiroshi* Kasai*, *Kenyo* Tobita*, *Susumu* Nakaya* and *Kenjiro* Yano*

We have developed small high-speed optical transceivers called SFF (Small Form Factor) and SFP (Small Form-factor Pluggable) optical transceiver suitable for use in Gigabit Ethernet, Fibre Channel and Synchronous Digital Hierarchy (SDH) applications. It has excellent transmit / receive performance that meets standards such as IEEE802.3z , ANSI FC-PI and ITU-T G.957.

1. Introduction

At the start of the 21st century, broadband services are beginning to take root in a real and significant way. Since last year, there has been a massive upsurge in the popularity of ADSL(Asymmetric Digital Subscriber Line) services targeting the general user, which provide at least 20 - 30 times the transmission capacity of ISDN lines at a fraction of the cost of FTTH (Fiber To The Home)systems. Consequently, this trend has obliged service providers to upgrade their network capacity, and optical networks, such as Gigabit Ethernet, are being used increasingly for backbone networks.

On the other hand, the trend in the business world is moving into the construction of SANs (Storage Area Network) to enable centralized processing of large data loads, and backup in the event of server crashes or other emergency scenarios. Here too, we are seeing the introduction of optical links based on 2 Gb/s class Fibre Channel, which are capable of longer and faster communication than existing SCSI connections.

In LANs (Local Area Network), high-end routers are already incorporating 2.48Gb/s class optical transmitters, previously reserved for selected trunk networks only.

Optical communication service providers, who moved successfully into trunk networks in the 1990s due to the boom in voice traffic, have scaled down their activity in this area and are expanding into the development of new business content systems (see Fig. 1) on a worldwide scale.

One of the key factors in supporting these networks has been the supply of low-cost, highly versatile optical communication devices. In February 1998,

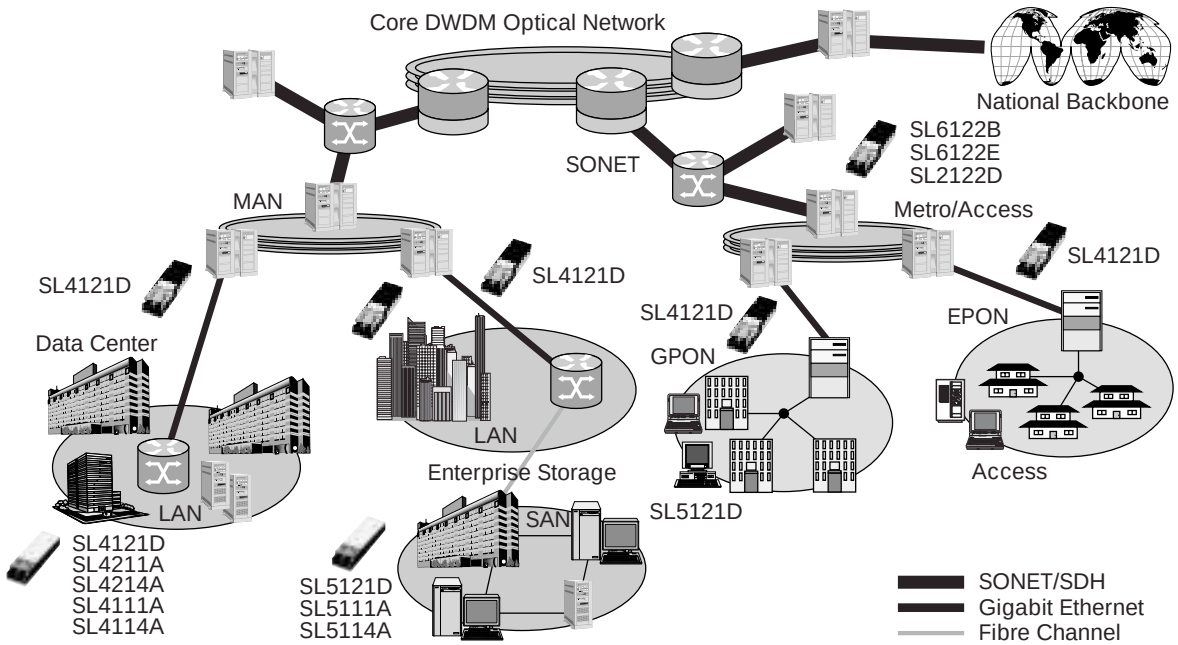

Fig. 1. Optical Communication Network for Broadband Era.

* SIGMA-LINKS INC.

six leading global communication equipment manufacturers signed a Multisource Agreement (MSA) defining standard specifications for small optical transceivers, known as Small Form Factor (SFF). In September 2000, another MSA was established for SFP (Small Form-factor Pluggable) transceivers which are Hot-pluggable modules having the same size as SFF.

SIGMA-LINKS INC. [*1)] has responded to these new demands through the development of SFF and SFP optical transceivers which are compliant with Gigabit Ethernet, Fibre Channels and SDH. This paper introduces the main characteristics of some of SIGMA-LINKS key products offering in this area.

2. SFF Optical Transceivers

SFF optical transceivers are about half the size of the old Duplex-SC optical transceivers and support various optical connector interfaces including MT-RJ, Duplex- LC and other options. The electrical interface include a 2 × 10 pin assignment with analogue monitoring signals, and a 2 × 5 pin assignment without the monitoring signals. These pins are soldered directly onto the host circuit board.

2.1 SFF Short Wavelength Optical Transceivers

Various SFF short wavelength optical transceiver products and their key features are shown in Table 1 [1)]. The electrical and optical characteristics conform to the Gigabit Ethernet standard (IEEE 802.3z) and Fibre Channel standard (ANSI FC-PI). The device has MT-RJ or Duplex-LC optical connector. Fig.2 shows the mechanical outline; the outer dimensions, pin layout and footprint are all MSA-compliant.

(1) Transmitter and Receiver Characteristics

Fig. 3 shows the transmitter and receiver eye patterns for the SL5111A operating at 2.125Gb/s. Excellent characteristics are obtained, with a 30% or larger mask margin in the transmitter optical output waveform. In addition, the receiver electrical output waveform has low jitter of just 35%.

SIGMA-LINKS INC.

Founded on April 1, 2001 as a joint venture between Fujikura and Oki Electric, to develop, manufacture and market small-form optical transceivers, such as SFF and SFP devices.

[*1)] This logo is a Registered Trademark of SIGMA-LINKS INC.

(2) EMI Characteristics

Since an optical transceiver installed in equipment is used for high-speed internal switching operations, it often is a source of radiation noise for both the inside and outside of the equipment, and hence EMI is a key criterion for equipment manufacturers when choosing an optical transceiver.

Fig. 4 shows a Host Bus Adapter (HBA) fitted with

Table 1. Main Features of SFF Short Wavelength Optical Transceivers

Part No.	SL4211A	SL4111A	SL5111A
Optical connector	MT-RJ	Duplex-LC	
Speed (Gb/s)	1.0625/1.25	1.0625/1.25	1.0625/2.125
Standard	ANSI FC-PI / IEEE 802.3z		ANSI FC-PI
Optical output power (dBm)	−9.5 ~ −4.0		
Receiver sensitivity (dBm)	−18 ~ 0		−16 ~ 0
No. of pin	2 × 5		
Power supply voltage (V)	+3.3 ± 5 %		
Laser type	λp=850 nm VCSEL		
Compatible fibers	50/125, 62.5/125 MMF		
Transmission distance (m)	550 (50/125 MMF)		300 (50/125 MMF)

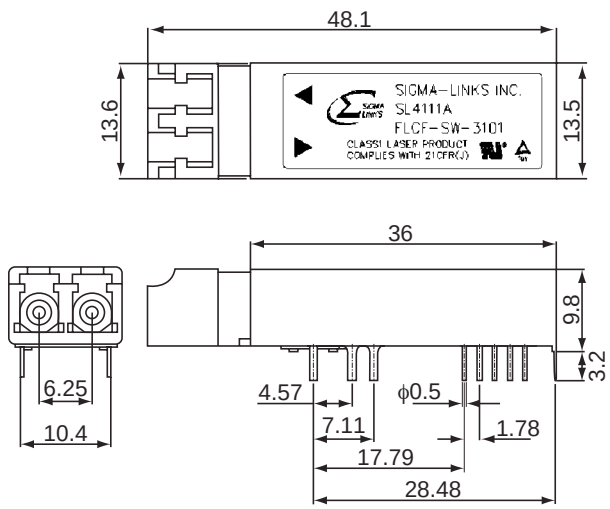

Fig. 2. Mechanical Outline of SFF Short Wavelength Optical Transceiver.

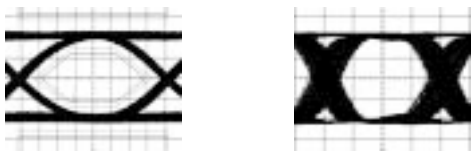

(a) Transmitter optical output waveform

(b) Receiver electrical output waveform (at−16dBm input)

Fig. 3. Transmitter and Receiver Eye Patterns (2.125 Gb/s, PRBS 2^7-1, mark ratio 1/2).

an SL511A and attached to a PC for EMI testing. Fig. 5 shows the measurement results for the noise radiated from the rear face of the PC during loopback operation at 2.125Gb/s. The margin with respect to the limitation for FCC class A (0dB) is more than 3dB superior to a competitor's product.

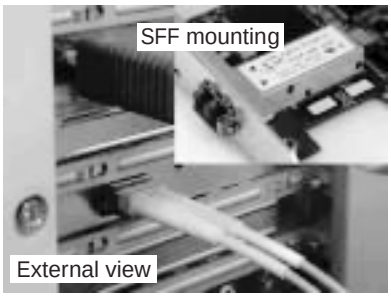

Fig. 4. Example of SFF Optical Transceiver in Use.

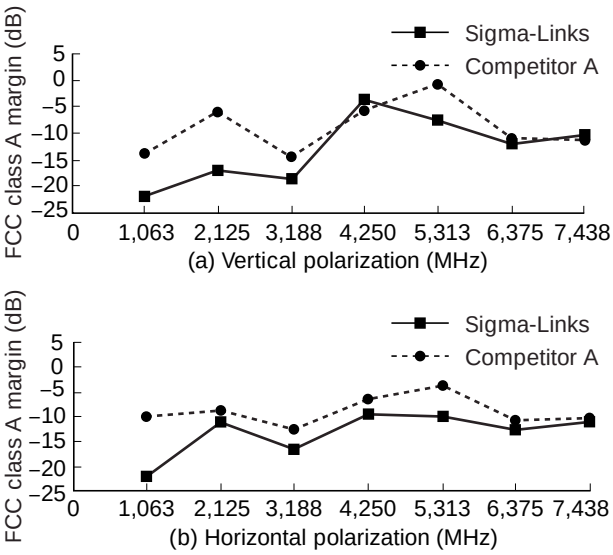

Fig. 5. Radiated Noise from HBA.

2.2 SFF Long Wavelength Optical Transceivers

Table 2 lists SFF long wavelength optical transceiver products and their key features [2)], and Fig. 6 shows an external view. The case is made from a plastic molding suitable for mass production. An EMI shield is fitted onto the front end of the case.

(1) Transmitter Optical Output Wavelength

In a long-wavelength transceiver using an LD whose operating current characteristics fluctuate with temperature, it is essential that a transmitter can keep the optical output waveform stable over a wide temperature range. Fig. 7 and Fig. 8 respectively show the temperature dependence of the transmitter optical eye pattern at 2.488Gb/s, and the extinction

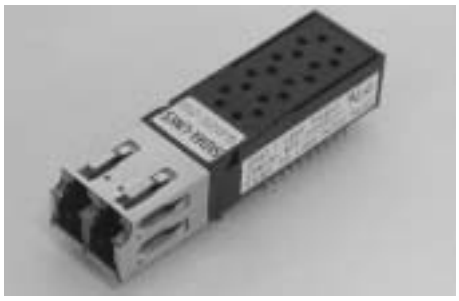

Fig. 6. External View of SFF Long Wavelength Optical Transceiver.

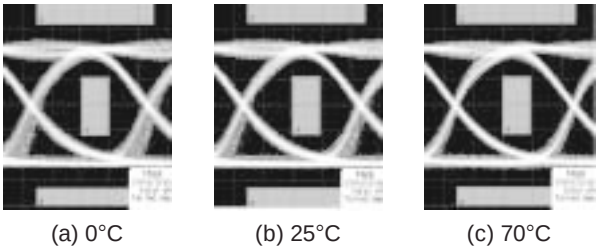

Fig. 7. Temperature Dependence of Transmission Eye Pattern (2.488 Gb/s, PRBS 2^23-1).

Table 2. Main Features of SFF Long Wavelength Optical Transceivers

Part No.	SL2122E	SL4121D	SL5121D	SL6122B	SL6122E
Optical connector	Duplex-LC				
Speed (Gb/s)	0.622	1.25	2.125	2.488	2.488
Standard	ITU-T G.957	IEEE 802.3 z	ANSI FC-PI	ITU-T G.957	ITU-T G.957
Optical output power (dBm)	–15 ~ –8	–9.5 ~ –3	–9 ~ –3	–10 ~ –3	–5 ~ 0
Receiver sensitivity (dBm)	–28~–8	–20.5~–3	–20.5~–3	–18~–3	–18~0
No. of pin	2 × 10	2 × 5	2 × 5	2 × 10	2 × 10
Power supply voltage (V)	+3.3 ± 5%				
Laser type	1,310nm FP-LD				1,310nm DFB-LD
Compatible fibres	1,310nm zero dispersion SMF				
Transmission distance (km)	15	10	10	2	15

ratio. The transmission eye patterns are stable at different temperatures and have a satisfactory mask margin, while temperature dependence of the extinction ratio is within 1.5dB.

(2) Receiver Characteristics

The SL6122E uses a DFB-LD having a narrow spectral width, and can transmit a 2.488Gb/s signal over 15km. Fig. 9 shows the minimum sensitivity characteristics. Fig. 10 shows the receiver electrical output waveform after 15km transmission. The minimum receiver sensitivity has a sufficient margin as compared to the specified value of –18 dBm. Transmission characteristics are very good, with error penalties being 0.5dB after 15km, and 0.8 dB after 30km.

3. SFP Optical Transceivers

SFP transceiver can be hot-plugged into a receptacle in the communication equipment such as switch or router. Therefore, extending the transmission distance between two switches or routers is easy, and hence SFPs have excellent advantages in terms of device expandability. Furthermore, they can be attached and detached while the equipment is active, so replacement and maintenance tasks are easy to carry out. Additional features include, amongst others, a Serial ID function (permitting external verification of information recorded in the product, such as transmission distance and transmission speed), and a TX_FAULT function (for detecting a fault in an LD driving circuit, or an LD of the transmitter).

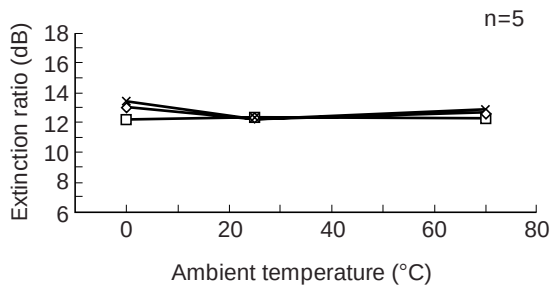

Fig. 8. Temperature Dependence of Extinction Ratio.

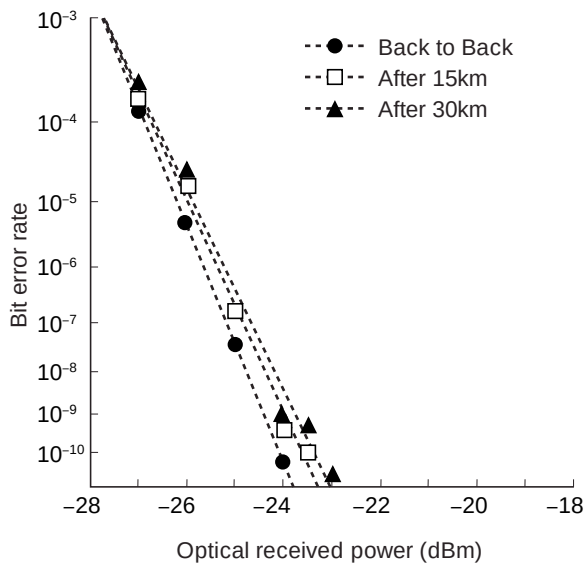

Fig. 9. Minimum Sensitivity Characteristics.

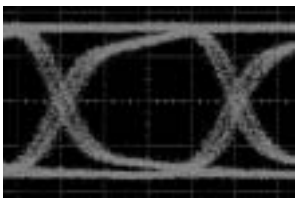

Fig. 10. Receiver Electrical Output.

3.1 SFP Short Wavelength Optical Transceivers

The SFP short-wave optical transceivers and their characteristics are listed in Table 3 [3]. These products have MT-RJ or Duplex-LC optical connector.

Fig. 11 shows the machanical outline. The outer dimensions and electric wiring, etc. comply with the MSA.

(1) Transmitter and Receiver Characteristics

Fig. 12 shows the receiver sensitivity characteristics of the SL5114A at 2.125Gb/s. The minimum receiver sensitivity is –22.2dBm, which has a satisfactory margin compared to the specified value, and

Table 3. Features of SFP Short Wavelength Optical Transceivers

Part No.	SL4214A	SL4114A	SL5114A
Optical connector	MT-RJ	Duplex-LC	
Speed (Gb/s)	1.0625/1.25	1.0625/1.25	1.0625/2.125
Standard	ANSI FC-PI / IEEE 802.3z		ANSI FC-PI
Optical output power (dBm)	–9.5 ~ –4.0		
Laser type	λp=850nm VCSEL		
Receiver sensitivity (dBm)	–18 ~ 0		–16 ~ 0
Power supply voltage (V)	+3.3 ± 5 %		
Compatible fibres	50/125, 62.5/125 MMF		
Transmission distance(m)	550 (50/125 MMF)		300 (50/125 MMF)

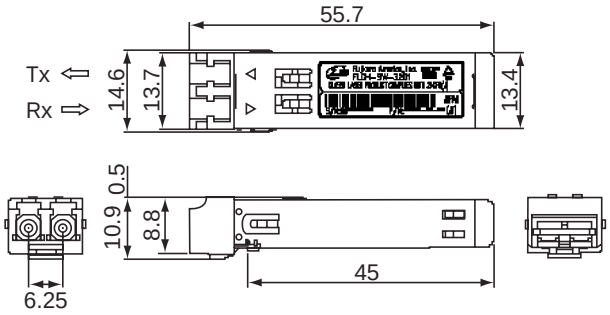

Fig. 11. Mechanical Outline of SFP Short Wavelength Optical Transceiver (Duplex-LC).

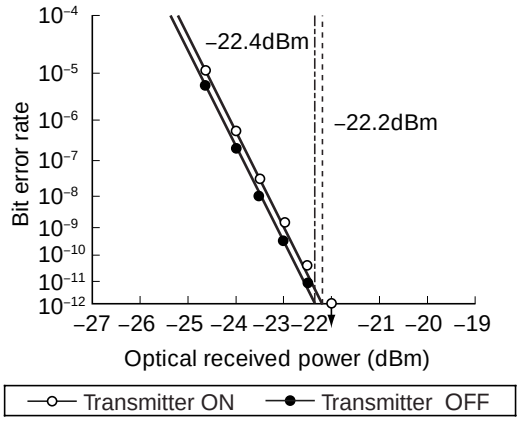

Fig. 12. Minimum Sensitivity Characteristics.

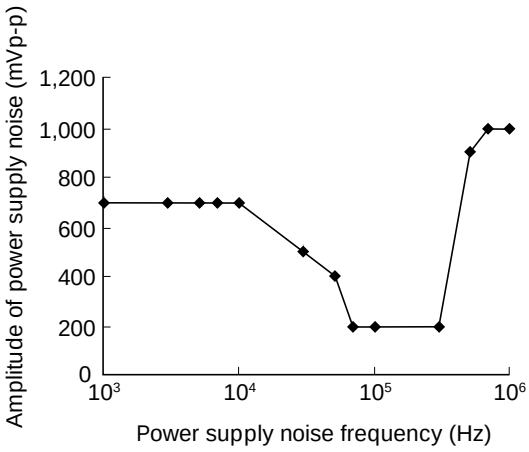

Fig. 13. Power Supply Noise Tolerance.

cross-talk between transmitter and receiver is a small value of 0.2dB.

(2) Power Supply Source Noise Tolerance

Fig. 13 shows power supply noise tolerance characteristics. Applied power supply noise frequencies are between 1kHz and 1MHz, and therefore have a suitable margin as compared to tolerable power supply noise specifications that are generally 100mVp-p or lower.

3.2 SFP Long Wavelength Optical Transceivers

SFP long wavelength optical transceiver products which are compatible with Fibre Channel, Gigabit Ethernet, or SDH applications have already been developed. These long wavelength products have been designed for use in systems demanding very high reliability, and they incorporate functions for monitoring the LD bias current, optical output power, receiver sensitivity and others.

Table 4. Reliability Test Items and Conditions

Item	Conditions
Vibration test	1,500 G, 0.5 msec, 5 times/axis
Mechanical shock test	Peak acceleration 20 G, Frequency 20 - 2,000 Hz, 4min./cycle ; 4cycle/axis
High temperature storage test	Stored at +85 °C for 2,000 h
Low temperature storage test	Stored at –40 °C for 2,000 h
Thermal shock test	ΔT = 100 °C or more 15cycles 2 min./cycle or less
Temperature cycle test	–40 °C ~ +85 °C, 1,000 cycles
Damp heat test	Operated at +85 °C, 85 %RH for 1,000 h
High temperature operation test	Operated at +85 °C for 2,000 h

4. Reliability Tests

All of the products described in this paper have passed reliability test conforming to Telcordia Technologies standards shown in Table 4. They were all confirmed to have good long-term reliability.

5. Conclusion

We developed many kind of SFF/SFP optical transceivers that have excellent performance. All products are compliant with the MSA, ITU-T, SONET, ANSI FC-PI, and IEEE 802.3z standard. SFF and SFP Transceiver are certain to become key components in the next generation networks.

References

1) Abe, et al.: ECTC 2001, The 51st Short Wave SFF Small Form Factor Transceivers
2) Matsumoto, et al.: IEICE General Conference B-10-53, Development of 2.5 Gbit/s LC-SFF optical transceivers
3) Tobita, et al.: Technical Report of the IEICE, OCS2001-09, 2.125 Gb/s SFP short-wave optical transceivers, p. 25