Dimensions of Plug
FOCLBP Series

Camera Side MDR

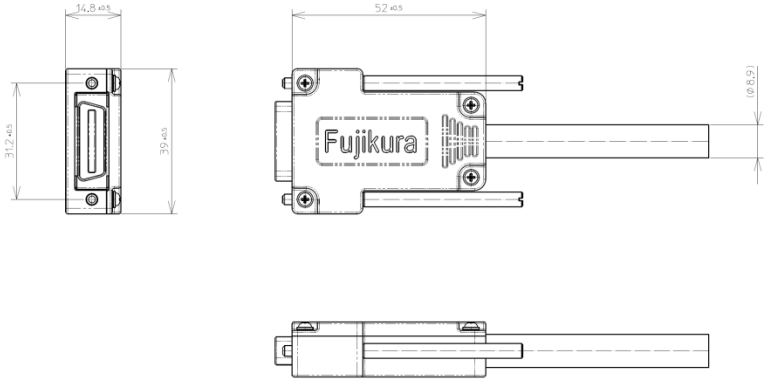

Grabber Side MDR

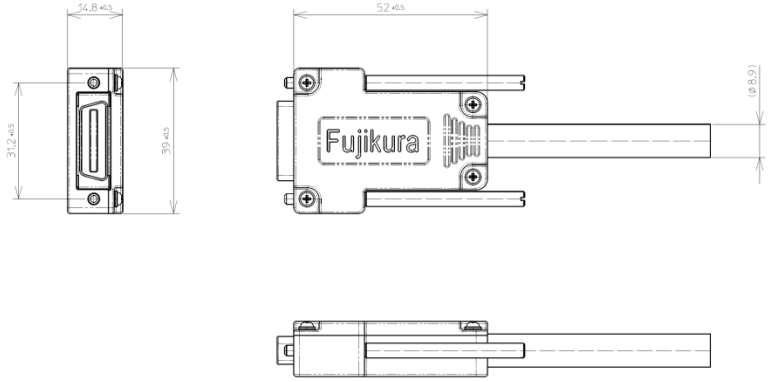

Camera Side SDR

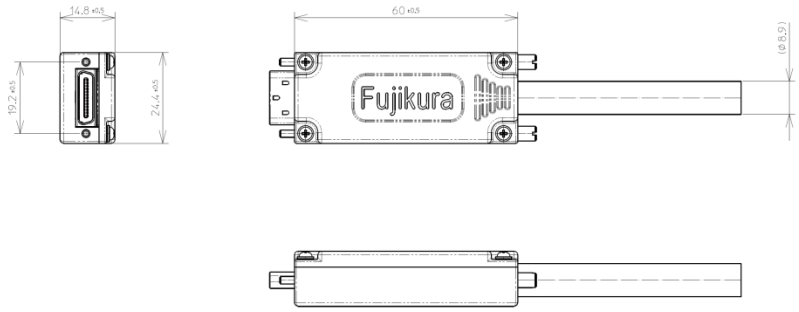

Grabber Side SDR

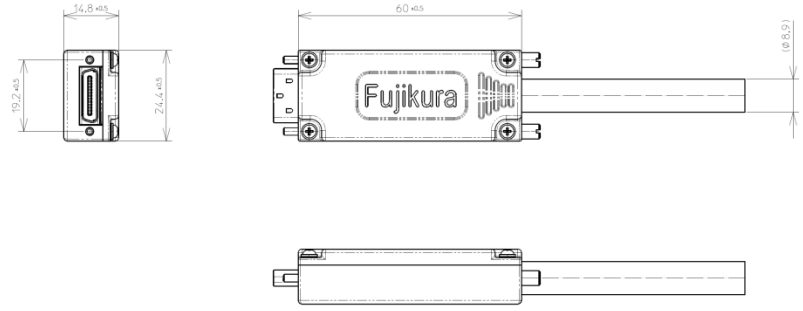

[Unit: mm]

CC93-11-16-0130

October, 2016
Fujikura Ltd.