Local Convergence Point Application

HRB (High-Rise Building) Solution

Features & Benefits

- Compatible with 19-inch standard rack
- Large-scaled subscribers access capacity
- Flexible configuration and addition of splice trays, splitter trays, and other subracks

Applications

- FTTH high-rise building or apartment indoor applications

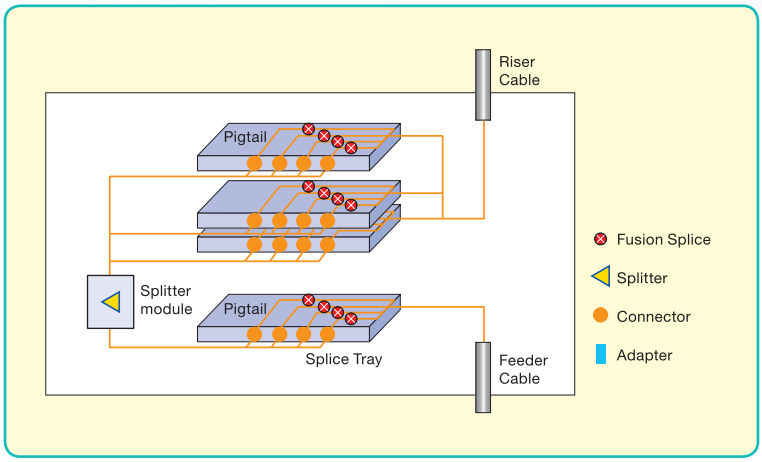

Configuration Example and Materials

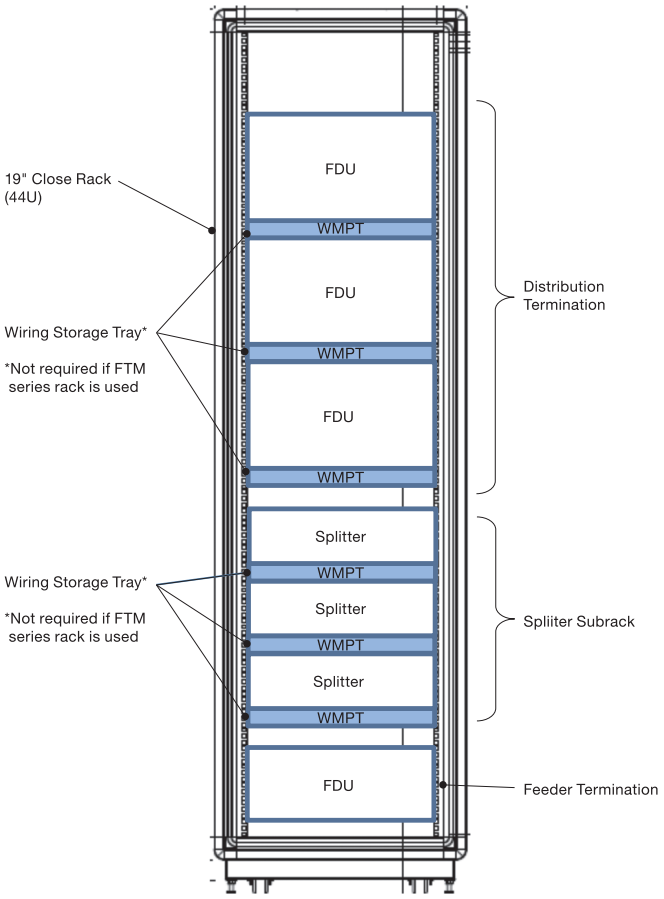

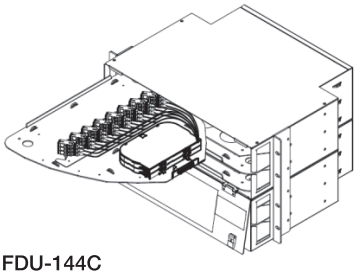

FDU-144C

Wiring Storage Tray FTB-R-WMPT (1U)

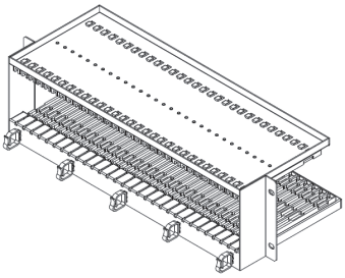

Splitter Chassis/Subrack (3U)